GOT
www.gotrading.co.th
GreatOrientalTrading

Centrifugal Fan

Series
LNb

EuroVent

Symbols and measurement units used in the catalogue.

V m^3/min	= Delivery in m^3/min
V m^3/h	= Delivery in m^3/h
pt mmH_2O	= Total pressure in mm H_2O
pt Pa	= Total pressure in Pascal
pd mmH_2O	= Dynamic pressure in mm H_2O
pd Pa	= Dynamic pressure in Pascal
c2	= Speed in m/s on pressing throat
n	= Fan rounds
Lp	= Noise level indicated in dB/A
P	= Power absorbed in kW
η	= Fan output

Table of positions of discharge

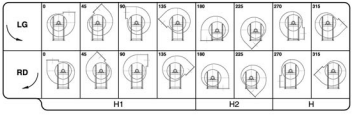

Fans constructive executions in conformity with rules UNI EN ISO 13349 (2009).

EXECUTION 1
For belt drive.Whee keyed overhung.Supports mounted on a base outside the air stream.
Max air temperature 90 °C without cooling fan; 350 °C when fitted with cooling fan.

ESEC. 1

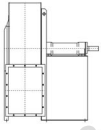

EXECUTION 9
For belt drive.Same as arrangement 1 with motor supported by the side wall of base.
Max air temperature: 90 °C without cooling fan; 350 °C when fitted with cooling fan.
Position of motor W or Z.

ESEC. 9

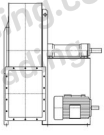

EXECUTION 12
For belt drive.Same as arrangement 1 with both fan and motor supported by the foundation frame. Max.air temperature: 90 °C without cooling fan; 350 °Cwhen fitted with cooling fan.
Position of motor W or Z (exceptionally X or Y).

ESEC. 12

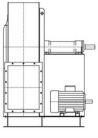

Plan for motor positioning belt drive.

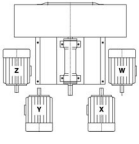

GOT
www.gotrading.co.th
GreatOrientalTrading

General concepts abouts centrifugal fans

The centrifugal fan essentially in a scroll in which a wheel rotates. The wheel's movement is caused by an external energy source, that is usually an electric motor. The main characteristics of a centrifugal fan are:

a) delivery c) efficiency
b) pressure d) rotation speed

DELIVERY

It is indicated by the value of the fluid intaken through the fan in the time unit;normally this is stated by the ratio m^3/sec., m^3/min., or m^3/h.

PRESSURE

It is usually indicated by the ratio kgf/m^2 or Pa. The pressure generated through a fan is named TOTAL (pt);it is the sum of two different pressures:STATIC + DYNAMIC.The static pressure (p.s.) is the potential energy that wins the circuit resistance when the fluid is passing through the circuit.The dynamic pressure (pd) is the kinetic energy of the moving fluid and it depends on the medium exit speed of the air from the fan throat; the formula is:

$$pd = \frac{C^2}{2g} \bullet 1.226 \qquad C = \frac{V}{A}$$

where:
V = delivery m^3/sec..
A = throat surface m^2
c = medium speed of the air m/sec.
g = acceleration of gravity (9,81 m/sec)
1,226 = air specific gravity kg/m^3at 15°C and 760 mm Hg.

ENERGY

It consists in the radio between the energy sypplied by the fan to the fluid and the energy used by the external source to put in operation the fan.
The formula is:

$$\eta = \frac{V \bullet pt}{6120 \bullet P}$$

where:
V = delivery m^3/min.
pt = total pressure kgf/m^2
P = used energy by the fan indicated in kW
η = fan efficiency

ROTATION SPEED

It is indicated by the number of roundes per minute:at this speed the wheel must rotate in order to get the required performances. N.B.The following tables show the characteristics of an operating device at air 15°C, barometric pressure 760 mm Hg, specific gravity 1,226 kg/m^3, test according to UNI ENISO 5801:2009 (UNI 10531:1995) rules.If customer wishes get different perfomances with intermediary value in respect of the value shown in the tables or if he prefers a device operating with air suction at different temperature in respect of 15°C and with different specific gravity in respect of 1,226 we suggest to follow these rules the characteristics of fans change according to the variation in speed rotation and considering the specific gravity of the fluid intaken.

a) Variation of rotation speed (n) with air specific gravity constant.
1. The delivery (V) varies directly with rotations ratio:

$$V_1 = V \bullet \frac{n^1}{n}$$

2. The pressure varies with square number of rotations ratio:

$$pt_1 = pt \bullet \left(\frac{n^1}{n}\right)^2$$

3. The energy (P) varies with cube of rotations ratio:

$$p_1 = p \bullet \left(\frac{n^1}{n}\right)^3$$

b) Variations of specific gravity (γ) of the air when rotation speed is constant.

1. The delivery (V) remains constant.
2. The pressure (pt) and the energy (P) vary directly with the ratio of specific gravities.

$$pt_1 = pt \bullet \frac{\gamma^1}{\gamma} \qquad P_1 = P \bullet \frac{\gamma^1}{\gamma}$$

The specific gravity of the air at different temperatures is obtained through the formula:

$$\gamma = \frac{1{,}293 \bullet 273}{(273+t)} \ (kg/m^3)$$

The air density depensing on a change of the atmospheric pressure is given by the following formula:

$$\gamma = \frac{Pb \bullet 13.59}{29.27 \bullet (273 + t)} \ (kg/m^3)$$

where:
γ = specific gravity at °C
1,293 = specific gravity of the air at 0°C
t = air temperature indicated in °C
273 = absolute zeto
Pb = atmospheric pressure mm Hg

This table shows directly the air specific gravity at different temperatures:

t°C	-20	-10	0	+10	+15	+20	+30	+40	+50	+60	+70	+80	+90	+100	+120	+140	+160	+180	+200	+220	+240	+260	+280	+300	+325	+350
γ	1,396	1,342	1,293	1,248	1,226	1,205	1,165	1,128	1,093	1,060	1,029	1,000	0,973	0,947	0,90	0,85	0,82	0,78	0,75	0,72	0,69	0,66	0,64	0,62	0,59	0,56

Atmospheric pressure depending on altitude above sea-level:

mt	0	500	1000	1500	2000	2500	3000	3500	4000	4500
Pb mm Hg	760	720	680	640	600	560	530	500	470	440

GOT www.gotcatalog.co.th Greatest Catalog Trading

CHARACTERISTICS

The features listed in the diagrams are refered to air at the temperature of + 15°C and at the barometrical pressure of 760 mm. Hg with specific gravity 1,226 Kg/m³.

NOISE LEVEL

The noise level values indicated are expressed in decibel scale A (dB/A) they are understood measured in a free range at the distance of **1.5 m** from the fan operating with the highest output capacity, connected to inlet and outlet pipe connections (rules UNI EN ISO 3740-3744-3746-13347).

ORIENTATIONS

All the fans can be constructed with the delivery mouth in 16 different positions (8 in clockwise rotation RD and 8 in counterclockwise rotation LG) as indicated on the orientation tables. Please note that the direction of rotation is determined by looking at the fan from the transmission side. Some sizes of these fans are revolvable always considering the rotation direction. This information is indicated at the end of the various tables of the overall dimensions. Flange see DIN 24154-24158.

ACCESSORIES (delivery on request)

- **intaking and pressing counterflange;**
- **inspection door:** to inspect and to clean the wheel and the scroll inside;
- **discharge cap:** it eliminates the condensate if any inside the fan and it is situated on the lowest part of the scroll.
- **vibrating proof joints in intaking and pressing time:** they are used to avoid the spreading of vibrations to the pipes;
- **safety grate for intaking throat:** it is used to avoid accidents when the fan is intaking from the room;
- **regulation lock on delivery:** it is used to regulate the fan delivery;
- **regulator of the flow rate in intaking time:** it is used to regulate the fan flow rate and it maintains high the efficiency level, also in regulating time.

SPECIAL CONSTRUCTIONS

Spark proof construction: when explosive fluids are carried or when the plant is installed in dangerous environments, the parts that come into contact with the intaken fluid are constructed by material without iron content to avoid rubbing, motor on request is supplied in special construction.
Corosionproofing construction: when corrosive fluids are carried, the parts that come into contact with the fluid are painted with special paints or they are constructed with special materials as austentic stainless steels (AISI 304-316 etc.).Constructions can be effected according to the customer's particular needs.

SOME VALUES OF AIR SPEED THAT MUST BE OBSERVED INSIDE THE IRON PIPES FOR SUCTION PLANTS, RELATING TO FOLLOWING MATERIALS:

Cereals dust	16–19 m/s
Varnish dust	15–18 m/s
Wooden shaving and sawdust	18–24 m/s
Dry dust of chemicals	17–20 m/s
Coal dust	20–25 m/s
Dust of plastic material working	18–23 m/s
Foundry fumes	15–18 m/s
Lapping sharpening and bufing wheels	20–25 m/s
Fumes of solvents for degreasing	12–17 m/s
Metallic shaving and dust	25–38 m/s
Rubber dust	17–20 m/s
Any toxic dust	15–25 m/s
Zinc oxide dust	18–21 m/s
Saw dust of marble	20–25 m/s
Hides buffing	18–23 m/s

SOME DATA ABOUT THE NUMBER OF THE AIR CHANGINGS FORESEEN IN CIVIL, INDUSTRIAL AND AGRICULTURAL ENVIRONMENTS:

Enviroments No. changings/hour					
Hen - hutch	8	Hide drying processes	35	Shops	5
Bovine - swine breeding	10	Facrories for rubber production	12	Hospitals	6
Hotel halls -rooms - corridors	4	Factories for alimentary pastes	6	Gymnasiums	20
Garages	8	Factories for chemicals production	15	Baker shops	15
Banks	6	Joineries	6	Swimming-pools	25
Bathrooms - showerbaths	6	Spinning - and weaving mills	5	Dance-halls	20
Galvanic baths	25	Foundries	25	Card-rooms	10
Carpenter shops - welding shops	12	Forge shops	25	Waiting-rooms	10
Heating plants	60	Steam laundries	30	Schools	6
Churches	15	Rooms for electric furnaces	30	Metallurgical works	5
Coffee - houses - bars - restaurants	10	Rooms for furnace	20	Supermarkets	5
Cinemas - theatres	15	Warehouses for perishable goods	15	Dyeing plants	30
Dye works	15	Warehouses for unperishable goods	5	Printing shops	20
Tanneries	18	Tobacco manufactures	12	Toilettes	30
		Grinding mills	20	Technical departments	15

www.gotrading.co.th
GreatOrientalTrading

series LNb SPECIFICATIONS

USE:
The high output centrifugal fans of this series are suitable for the suction of clean or plants slightly dusty air in civil and industrial air conditioning.
In particular plants for:
Ventilation: stables, mines. tunnels.
Suction: vitated air, welding fumes, vapours from solvent tanks and spraying booths.
Aeration: storage bins, sheds.
Cooling: plastic materials, cloths, glass plates.
Drying: fodder, cereals. papers, varnishes, wood.
Elimination: fumes and toxic gas.
This series is also used where it is necessary to transport air with maximum temperature of 90°C with low pressure. For temperatures of the transported fluid higher than 90°C up to 350°C a small heat stopping fan is splined to the shaft between support and scroll, besides the fan is painted with a special aluminium paint suitable for high temperatures.

Operating range

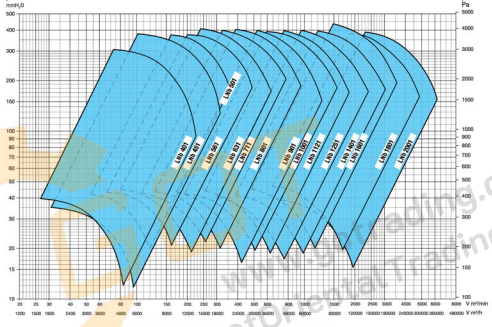

www.GreatOrientalTrading.co.th
GreatOrientalTrading

SERIES LNb 401 SPECIFICATIONS

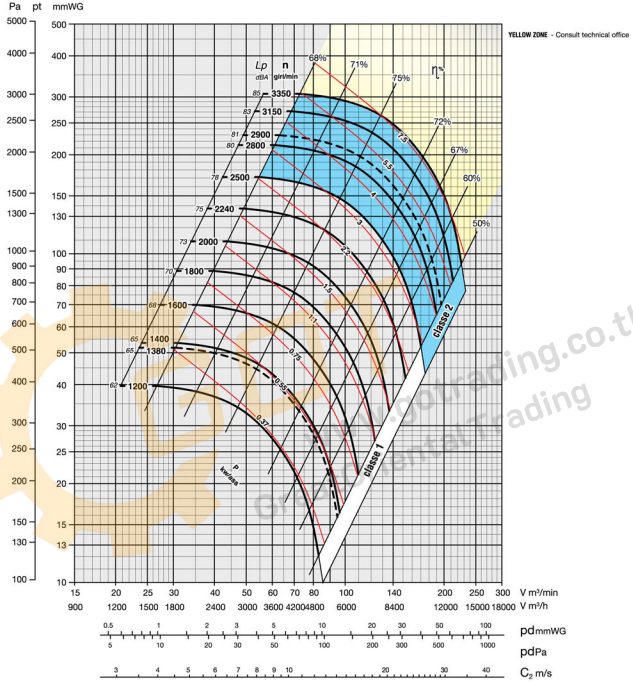

Class 1

Maximum admissible rounds:

<100°C = 2500 rounds/min.
100–200°C = 2240 rounds/min.
200–350°C = 2000 rounds/min.

Class 2

Maximum admissible rounds:

<100°C = 3300 rounds/min.
100–200°C = 3000 rounds/min.
200–350°C = 2600 rounds/min.

Noise level tolerance + 3 dB

KW consumed fan tolerance ± 3%

SERIES LNb 401 SPECIFICATIONS

OVERALL DIMENSIONS in mm

Class 1

PD^2 = 0,80 kgm^2

GD^2

Weight kg 82

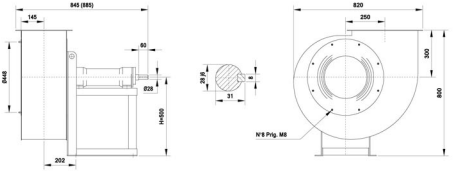

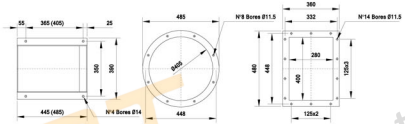

Class 2

PD^2 = 0,83 kgm^2

GD^2

Weight kg 88

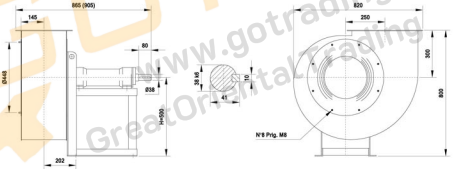

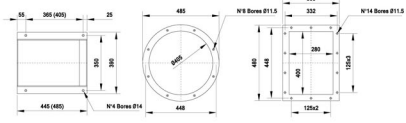

The fan is revolvable

UNI ISO 13349 rules orientations (transmission side)

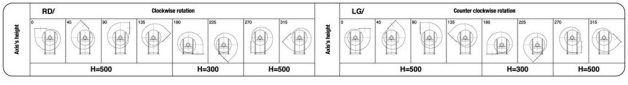

www.gotrading.co.th
GreatOrientalTrading

SERIES LNb 451 SPECIFICATIONS

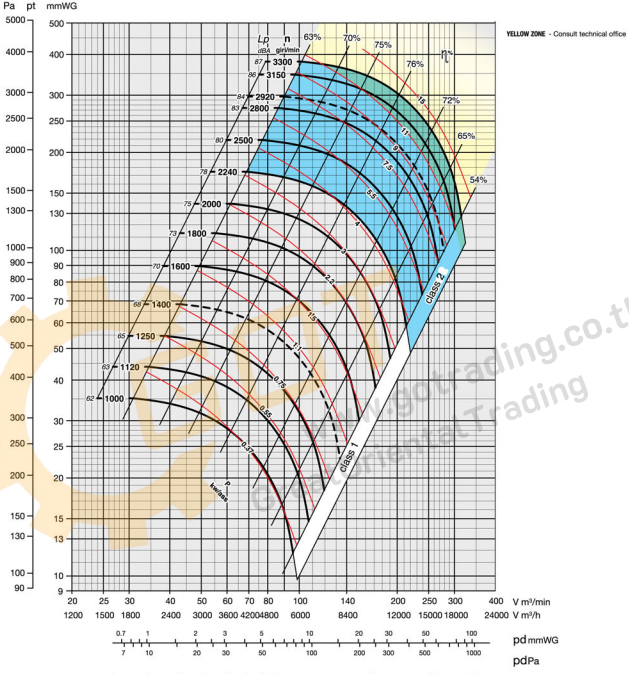

Class 1

Maximum admissible rounds:

<100°C = 2240 rounds/min.
100–200°C = 2000 rounds/min.
200–350°C = 1800 rounds/min.

Class 2

Maximum admissible rounds:

<100°C = 3300 rounds/min.
100–200°C = 3000 rounds/min.
200–350°C = 2600 rounds/min.

Noise level tolerance + 3 dBA

KW consumed fan tolerance ± 3%

Thai Industrial Trading

SERIES LNb 451 SPECIFICATIONS

OVERALL DIMENSIONS in mm

Class 1

PD^2 / GD^2 = 1,4 kgm^2

Weight kg 97

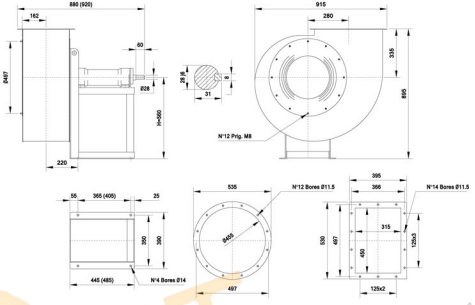

N.B.: For constructive reasons, the fans from size 451÷501 follow an orientation with angles of 30° instead of 45°. Therefore, when you place an order, you must clearly indicate if 45° are required.

Class 2

PD^2 / GD^2 = 1,5 kgm^2

Weight kg 103

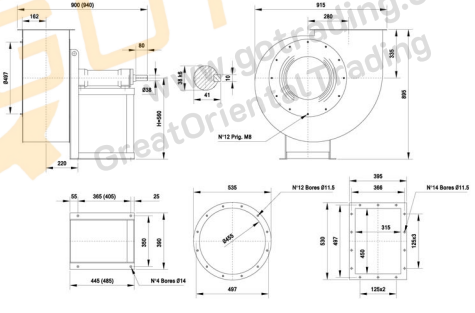

www.gptrading.co.th
GreatOrientalTrading

The fan is revolvable

UNI ISO 13349 rules orientations (transmission side)

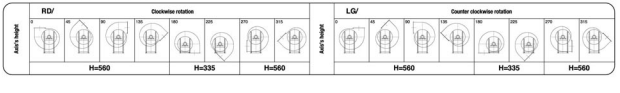

SERIES LNb 501 SPECIFICATIONS

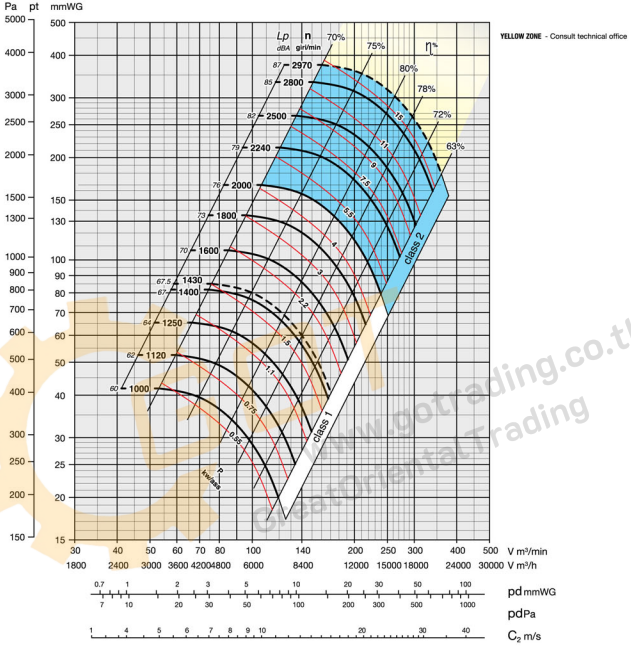

www.pptrading.co.th
Great Oriental Trading

Class 1

Maximum admissible rounds:

<100°C = 2000 rounds/min.
100–200°C = 1800 rounds/min.
200–350°C = 1600 rounds/min.

Class 2

Maximum admissible rounds:

<100°C = 2970 rounds/min.
100–200°C = 2700 rounds/min.
200–350°C = 2350 rounds/min.

Noise level tolerance + 3 dBA

KW consumed fan tolerance ± 3%

SERIES LNb 501 SPECIFICATIONS

OVERALL DIMENSIONS in mm

Class 1

PD^2 / GD^2 = 2,5 kgm²

Weight kg 115

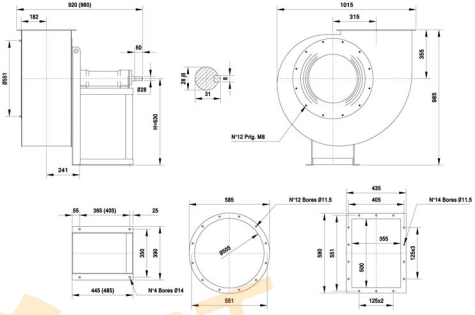

N.B.: For constructive reasons, the fans from size 451÷501 follow an orientation with angles of 30° instead of 45°. Therefore, when you place an order, you must clearly indicate if 45° are required.

Class 2

PD^2 / GD^2 = 2,9 kgm²

Weight kg 131

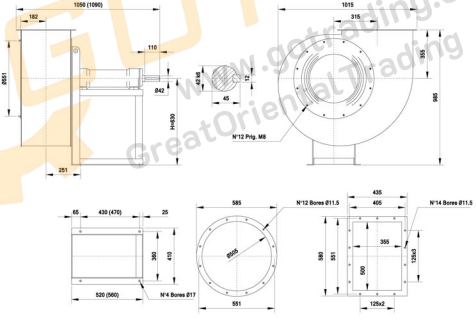

GOT
www.gotbeding.co.th
GreatOrientalTrading

The fan is revolvable

UNI ISO 13349 rules orientations (transmission side)

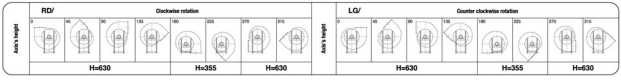

SERIES LNb 561 SPECIFICATIONS

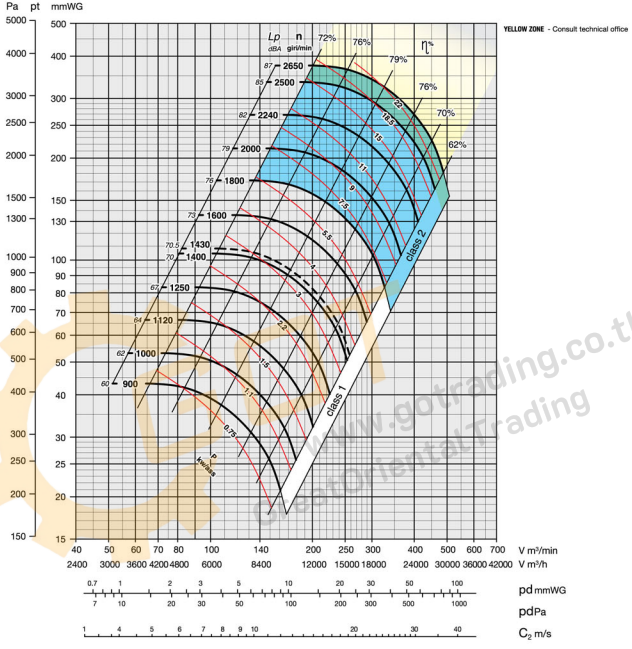

Class 1

Maximum admissible rounds:

<100°C = 1800 rounds/min.
100–200°C = 1600 rounds/min.
200–350°C = 1400 rounds/min.

Class 2

Maximum admissible rounds:

<100°C = 2700 rounds/min.
100–200°C = 2400 rounds/min.
200–350°C = 2150 rounds/min.

Noise level tolerance + 3 dBA

KW consumed fan tolerance ± 3%

www.gotrading.co.th
Gee Oriental Trading

SERIES LNb 561 SPECIFICATIONS

OVERALL DIMENSIONS in mm

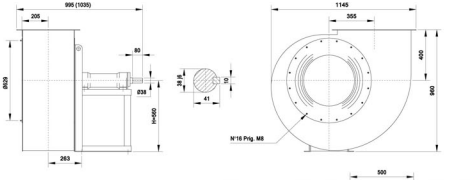

Class 1

PD^2
GD^2 = 3,8 kgm²

Weight kg 154

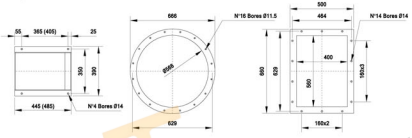

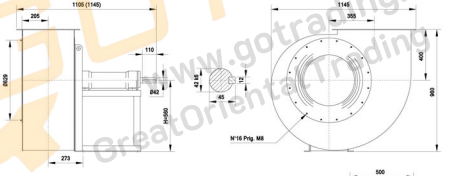

Class 2

PD^2
GD^2 = 4,2 kgm²

Weight kg 169

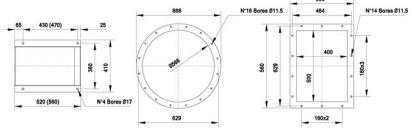

The fan is revolvable

UNI ISO 13349 rules orientations (transmission side)

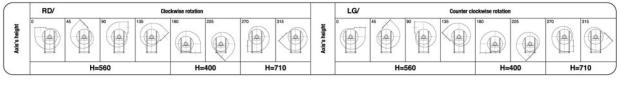

www.gotrading.co.th
GreatOriental Trading

SERIES LNb 631 SPECIFICATIONS

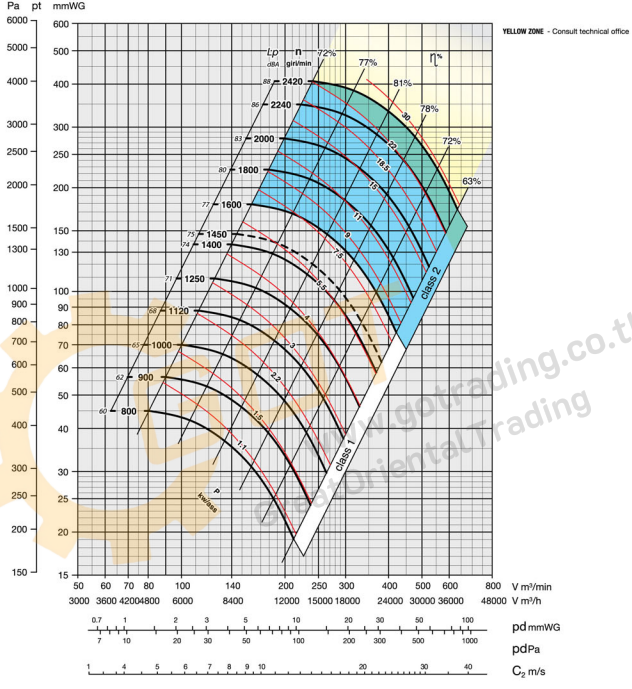

www.gotrading.co.th
Goto Oriental Trading

Class 1

Maximum admissible rounds:

<100°C = 1600 rounds/min.
100–200°C = 1400 rounds/min.
200–350°C = 1250 rounds/min.

Class 2

Maximum admissible rounds:

<100°C = 2350 rounds/min.
100–200°C = 2150 rounds/min.
200–350°C = 1950 rounds/min.

Noise level tolerance + 3 dBA

KW consumed fan tolerance ± 3%

SERIES LNb 631 SPECIFICATIONS

OVERALL DIMENSIONS in mm

Class 1

PD^2
GD^2 = 6,2 kgm²

Weight kg 200

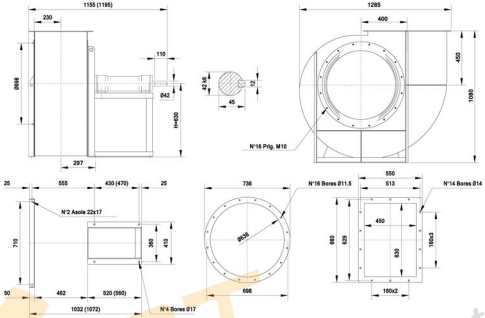

Class 2

PD^2
GD^2 = 6,8 kgm²

Weight kg 212

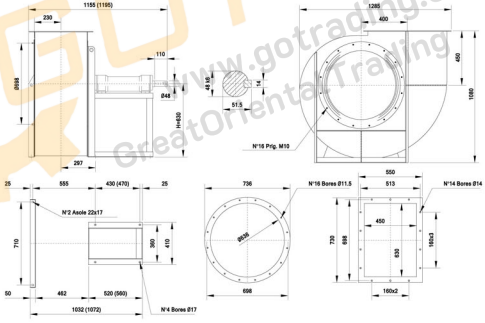

www.gotrading.co.th
GreatOrientalTrading

The fan is revolvable

UNI ISO 13349 rules orientations (transmission side)

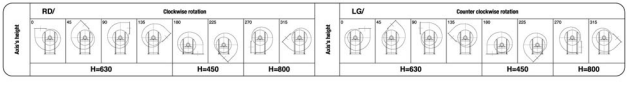

SERIES LNb 711 SPECIFICATIONS

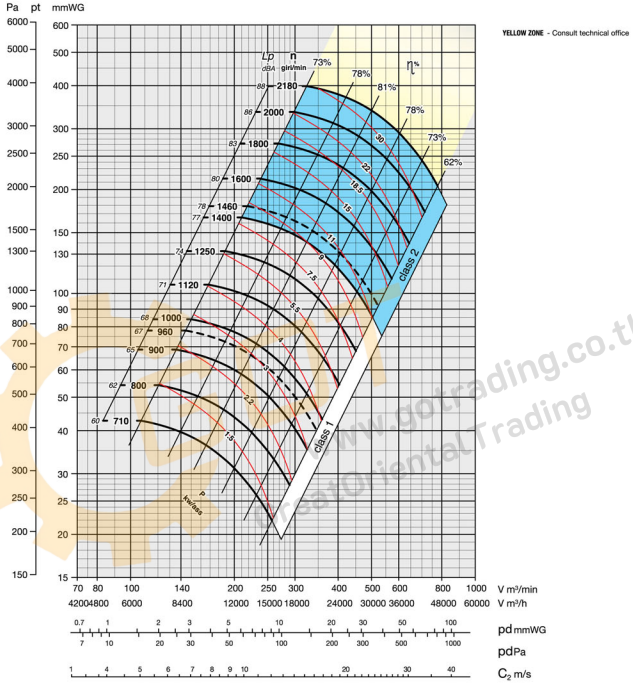

www.pgtrading.co.th
Great Oriental Trading

Class 1

Maximum admissible rounds:

<100°C = 1400 rounds/min.
100–200°C = 1250 rounds/min.
200–350°C = 1120 rounds/min.

Class 2

Maximum admissible rounds:

<100°C = 2180 rounds/min.
100–200°C = 1950 rounds/min.
200–350°C = 1750 rounds/min.

Noise level tolerance + 3 dBA

KW consumed fan tolerance ± 3%

SERIES LNb 711 SPECIFICATIONS

OVERALL DIMENSIONS in mm

Class 1

PD^2 / GD^2 = 11,2 kgm²

Weight kg 265

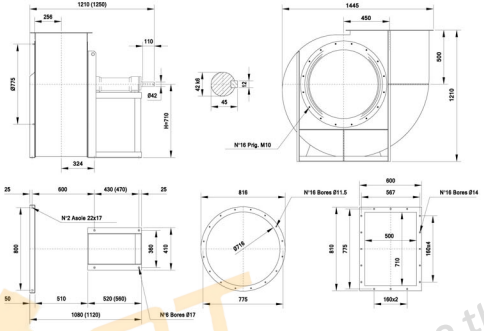

Fan with cooling fan

Class 2

PD^2 / GD^2 = 11,9 kgm²

Weight kg 282

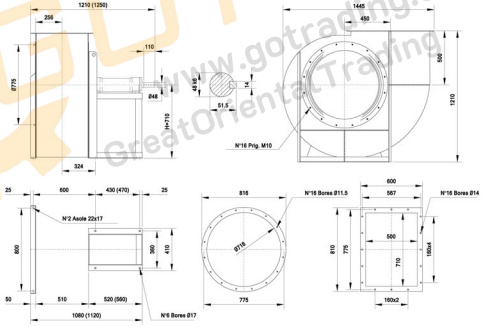

The fan is revolvable

UNI ISO 13349 rules orientations (transmission side)

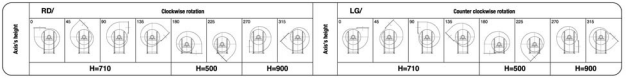

www.gotrading.co.th
GreatOrientalTrading

SERIES LNb 801 SPECIFICATIONS

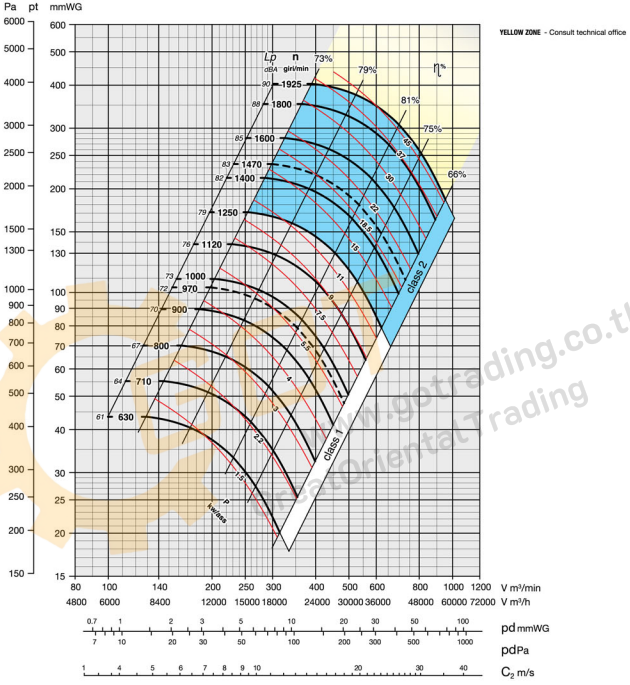

YELLOW ZONE - Consult technical office

Class 1

Maximum admissible rounds:

<100°C = 1250 rounds/min.
100–200°C = 1120 rounds/min.
200–350°C = 1000 rounds/min.

Class 2

Maximum admissible rounds:

<100°C = 1950 rounds/min.
100–200°C = 1750 rounds/min.
200–350°C = 1550 rounds/min.

Noise level tolerance + 3 dBA

KW consumed fan tolerance ± 3%

www.gotrading.co.th
GotOriental Trading

SERIES LNb 801 SPECIFICATIONS

OVERALL DIMENSIONS in mm

Class 1

PD^2 / GD^2 = 20,6 kgm²

Weight kg 355

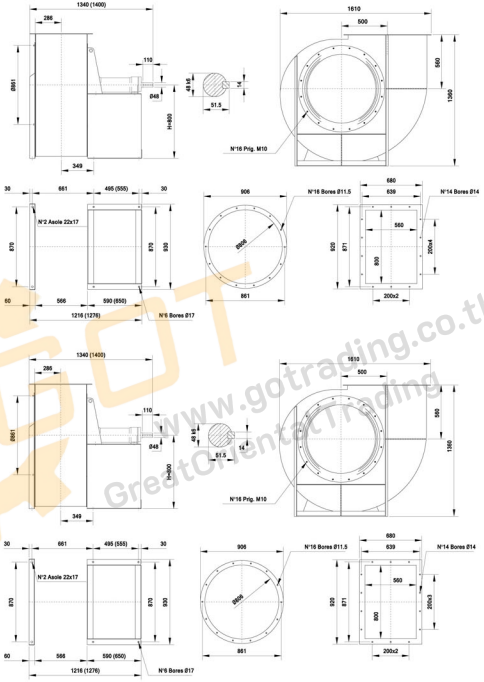

Fan with cooling fan

Class 2

PD^2 / GD^2 = 21,8 kgm²

Weight kg 375

The fan is revolvable

UNI ISO 13349 rules orientations (transmission side)

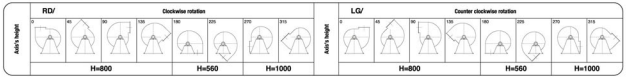

www.gotrading.co.th
GreatOrientalTrading

SERIES LNb 901 SPECIFICATIONS

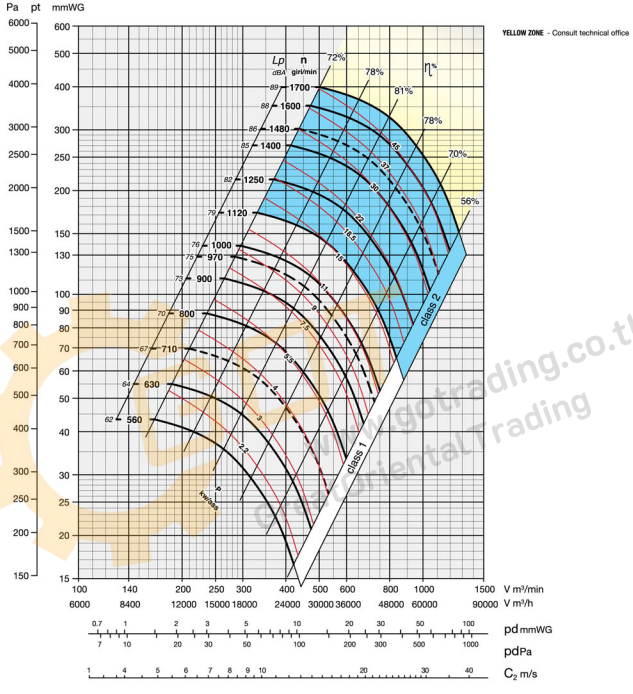

Class 1

Maximum admissible rounds:

<100°C = 1120 rounds/min.
100–200°C = 1000 rounds/min.
200–350°C = 900 rounds/min.

Class 2

Maximum admissible rounds:

<100°C = 1700 rounds/min.
100–200°C = 1550 rounds/min.
200–350°C = 1350 rounds/min.

Noise level tolerance + 3 dBA

KW consumed fan tolerance ± 3%

www.oegotrading.co.th
Oriental Trading

SERIES LNb 901 SPECIFICATIONS

OVERALL DIMENSIONS in mm

Class 1

PD^2
GD^2 = 43,4 kgm²

Weight kg 455

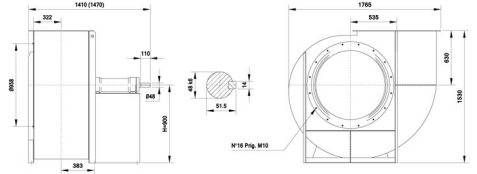

Fan with cooling fan

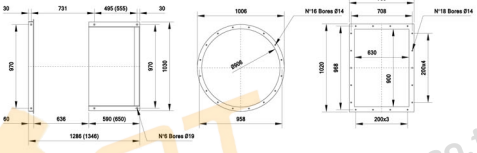

Class 2

PD^2
GD^2 = 45 kgm²

Weight kg 475

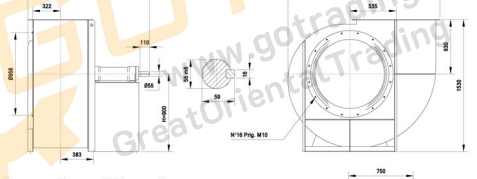

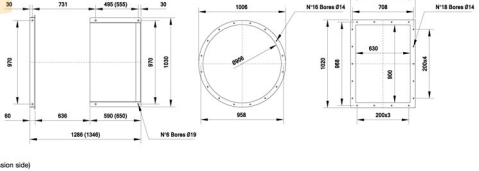

The fan is not revolvable

UNI ISO 13349 rules orientations (transmission side)

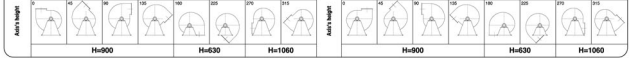

www.gotrading.co.th
GreatOrientalTrading

SERIES LNb 1001 SPECIFICATIONS

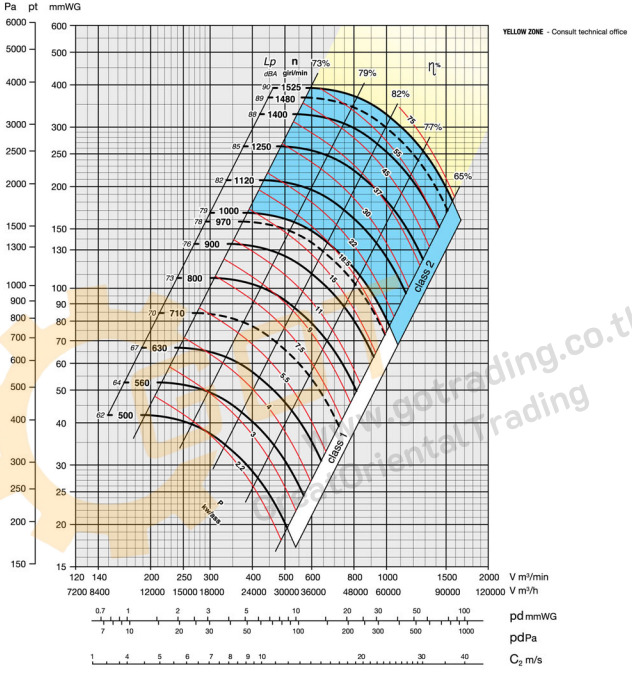

www.gotrading.co.th
Oriental Trading

Class 1

Maximum admissible rounds:

<100°C = 1000 rounds/min.
100–200°C = 900 rounds/min.
200–350°C = 800 rounds/min.

Class 2

Maximum admissible rounds:

<100°C = 1525 rounds/min.
100–200°C = 1400 rounds/min.
200–350°C = 1200 rounds/min.

Noise level tolerance + 3 dBA

KW consumed fan tolerance ± 3%

SERIES LNb 1001 SPECIFICATIONS

OVERALL DIMENSIONS in mm

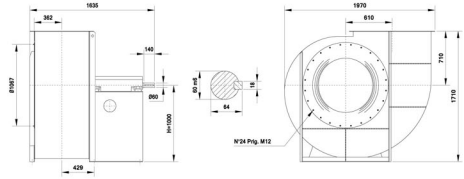

Class 1

PD^2
GD^2 = 72 kgm^2

Weight kg 560

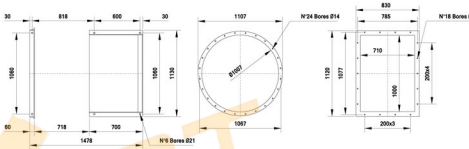

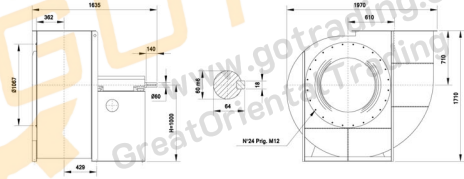

Class 2

PD^2
GD^2 = 76,5 kgm^2

Weight kg 632

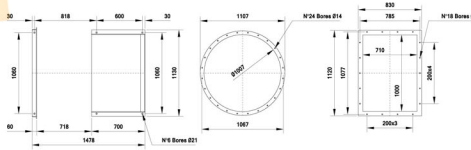

The fan is not revolvable

UNI ISO 13349 rules orientations (transmission side)

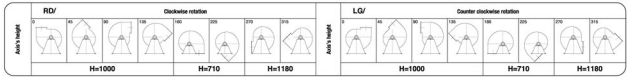

www.gotrading.co.th
GreatOrientalTrading

SERIES LNb 1121 SPECIFICATIONS

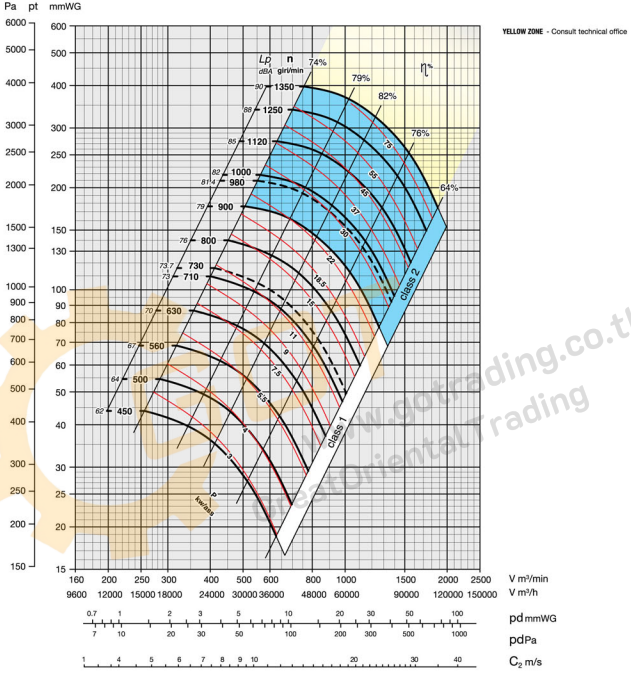

www.gotrading.co.th
Great Oriental Trading

Class 1

Maximum admissible rounds:

<100°C = 900 rounds/min.
100–200°C = 800 rounds/min.
200–350°C = 710 rounds/min.

Class 2

Maximum admissible rounds:

<100°C = 1350 rounds/min.
100–200°C = 1250 rounds/min.
200–350°C = 1050 rounds/min.

Noise level tolerance + 3 dBA

KW consumed fan tolerance ± 3%

SERIES LNb 1121 SPECIFICATIONS

OVERALL DIMENSIONS in mm

Class 1

PD^2 / GD^2 = 108 kgm²

Weight kg 810

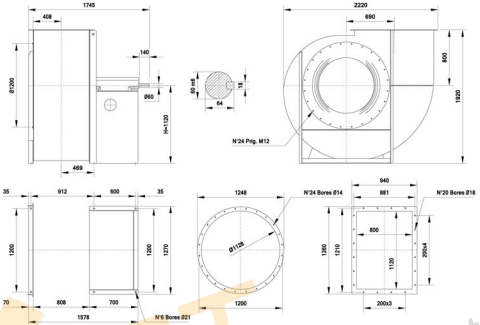

Class 2

PD^2 / GD^2 = 114 kgm²

Weight kg 842

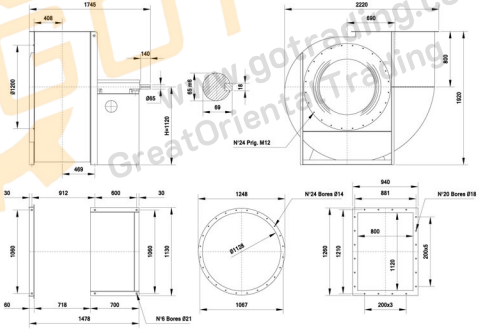

The fan is not revolvable

UNI ISO 13349 rules orientations (transmission side)

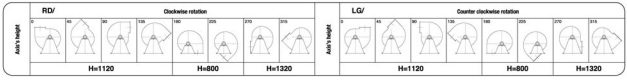

www.gotrading.co.th
GreatOrientalTrading

SERIES LNb 1251 SPECIFICATIONS

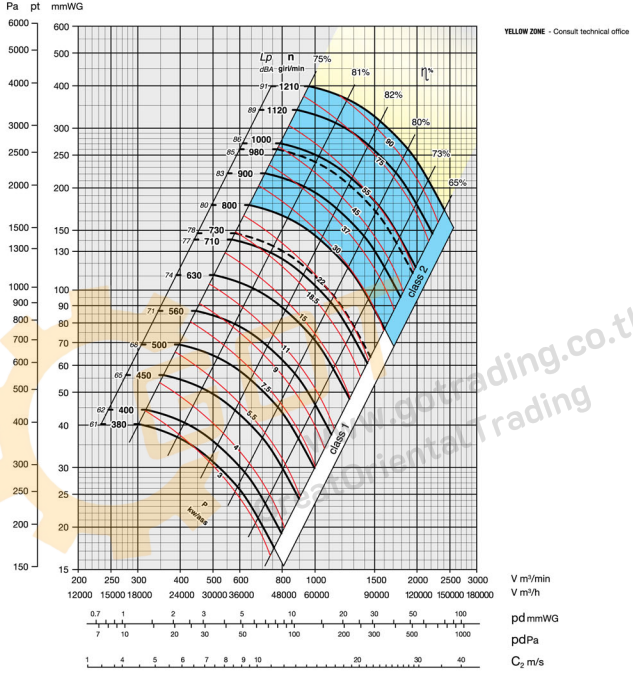

YELLOW ZONE - Consult technical office

Class 1

Maximum admissible rounds:

<100°C = 800 rounds/min.
100–200°C = 710 rounds/min.
200–350°C = 650 rounds/min.

Class 2

Maximum admissible rounds:

<100°C = 1210 rounds/min.
100–200°C = 1100 rounds/min.
200–350°C = 950 rounds/min.

Noise level tolerance + 3 dBA

KW consumed fan tolerance ± 3%

www.obtrading.co.th
Oriental Trading

SERIES LNb 1251 SPECIFICATIONS

OVERALL DIMENSIONS in mm

Class 1

PD^2
GD^2 = 166 kgm²

Weight kg 955

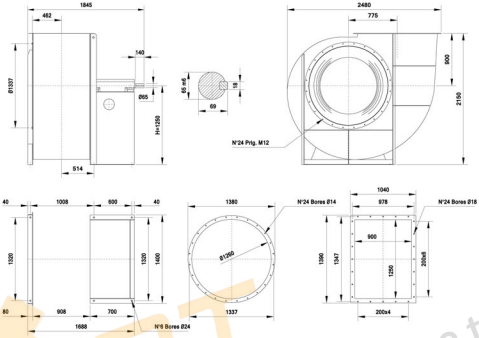

Class 2

PD^2
GD^2 = 175 kgm²

Weight kg 985

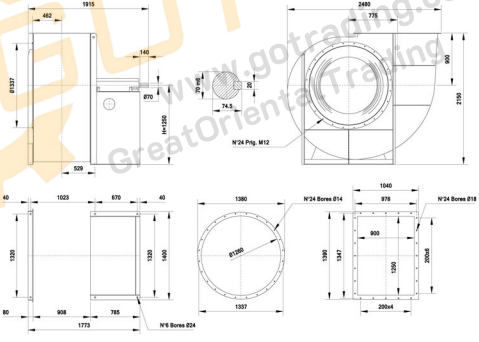

The fan is not revolvable

UNI ISO 13349 rules orientations (transmission side)

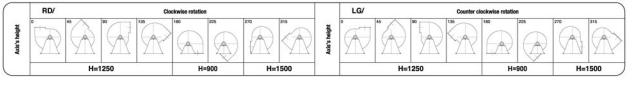

www.gotraining.co.th
GreatOrientalTraining

SERIES LNb 1401 SPECIFICATIONS

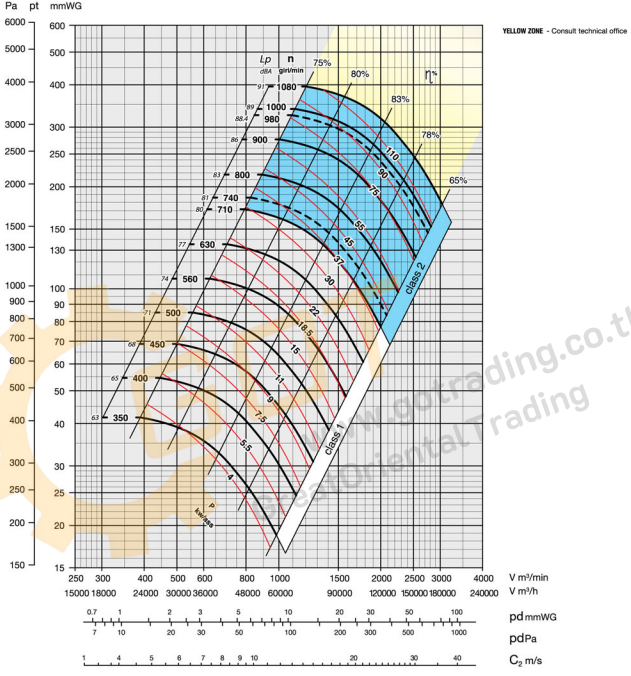

www.pbtrading.co.th
Pb Oriental Trading

Class 1

Maximum admissible rounds:

<100°C = 710 rounds/min.
100–200°C = 630 rounds/min.
200–350°C = 560 rounds/min.

Class 2

Maximum admissible rounds:

<100°C = 1080 rounds/min.
100–200°C = 1000 rounds/min.
200–350°C = 850 rounds/min.

Noise level tolerance + 3 dBA

KW consumed fan tolerance ± 3%

SERIES LNb 1401 SPECIFICATIONS

OVERALL DIMENSIONS in mm

Class 1

PD^2
GD^2 = 272 kgm²

Weight kg 1415

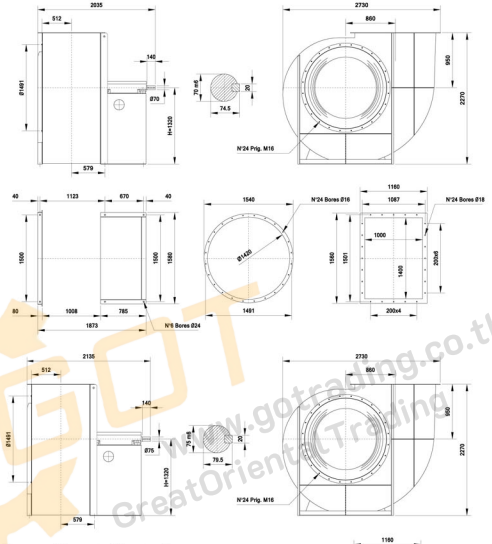

Class 2

PD^2
GD^2 = 282 kgm²

Weight kg 1483

The fan is not revolvable

UNI ISO 13349 rules orientations (transmission side)

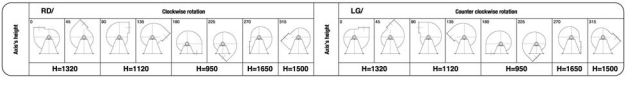

www.gotrading.co.th
GreatOrientalTrading

SERIES LNb 1601 SPECIFICATIONS

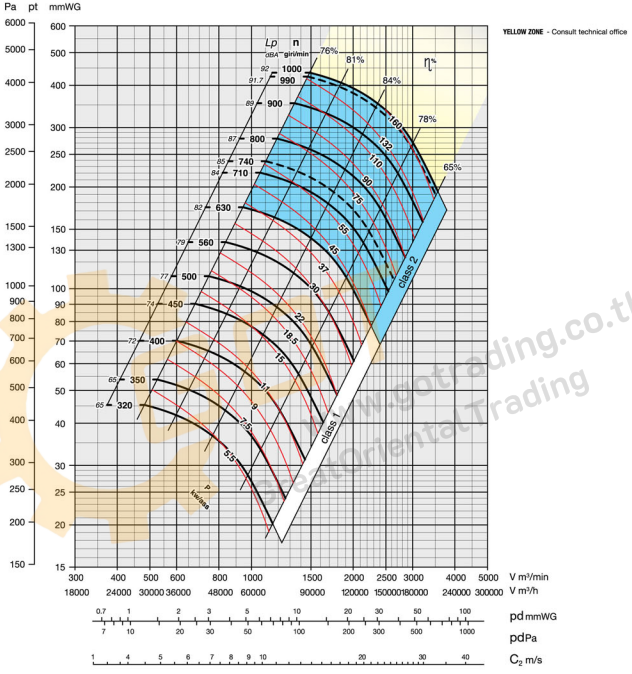

Class 1

Maximum admissible rounds:

<100°C = 630rounds/min.
100–200°C = 560 rounds/min.
200–350°C = 500 rounds/min.

Class 2

Maximum admissible rounds:

<100°C = 1000 rounds/min.
100–200°C = 900 rounds/min.
200–350°C = 750 rounds/min.

Noise level tolerance + 3 dBA

KW consumed fan tolerance ± 3%

www.gotrading.co.th
Goto Oriental Trading

SERIES LNb 1601 SPECIFICATIONS

OVERALL DIMENSIONS in mm

Class 1

PD^2
GD^2 = 530 kgm²

Weight kg 1850

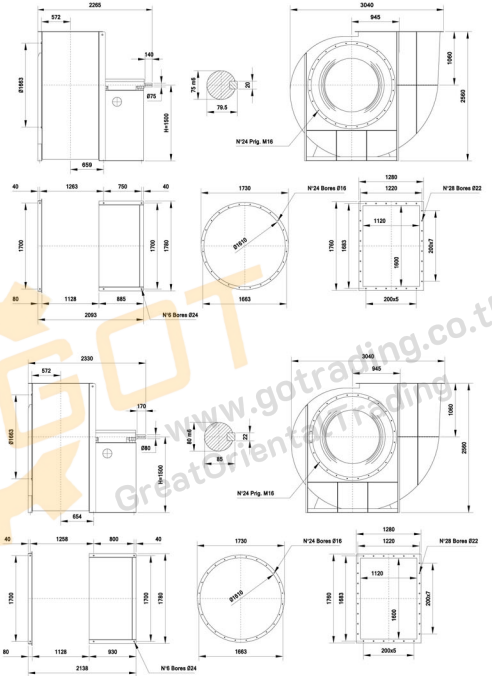

Class 2

PD^2
GD^2 = 548 kgm²

Weight kg 1910

The fan is not revolvable

UNI ISO 13349 rules orientations (transmission side)

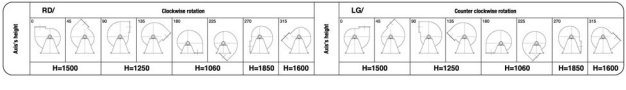

www.gotrading.co.th
GreatOrientalTrading

SERIES LNb 1801 SPECIFICATIONS

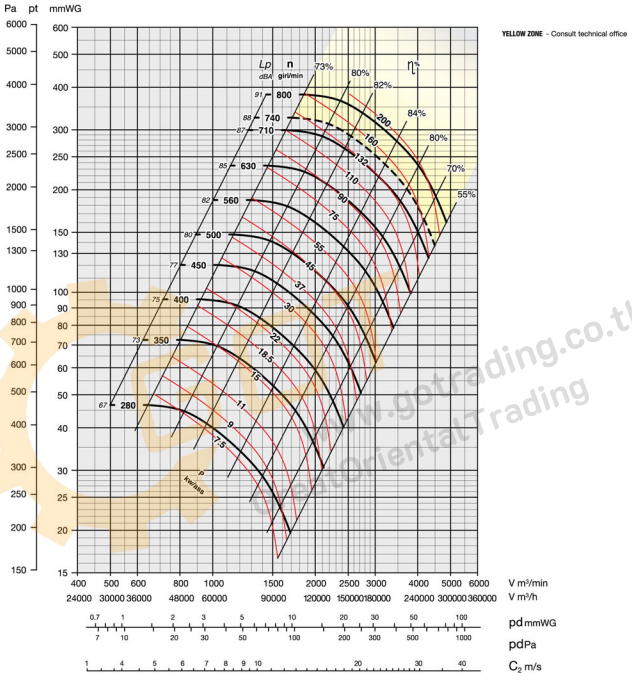

Maximum admissible rounds:

<100°C = 800 rounds/min.
100–200°C = 630 rounds/min.
200–350°C = 430 rounds/min.

Noise level tolerance + 3 dBA

KW consumed fan tolerance ± 3%

www.gotrading.co.th
Gotoriental Trading

SERIES LNb 1801 SPECIFICATIONS

OVERALL DIMENSIONS in mm

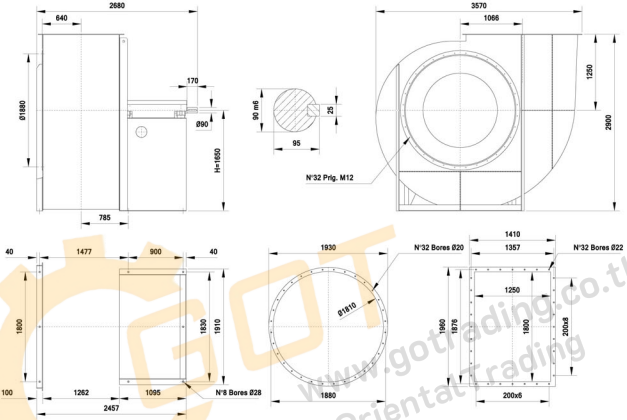

GOT
www.gottrading.co.th
GreatOrientalTrading

PD^2
GD^2 = 1200 kgm²

Weight kg 2800

The fan is not revolvable

UNI ISO 13349 rules orientations (transmission side)

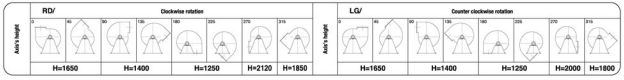

SERIES LNb 2001 SPECIFICATIONS

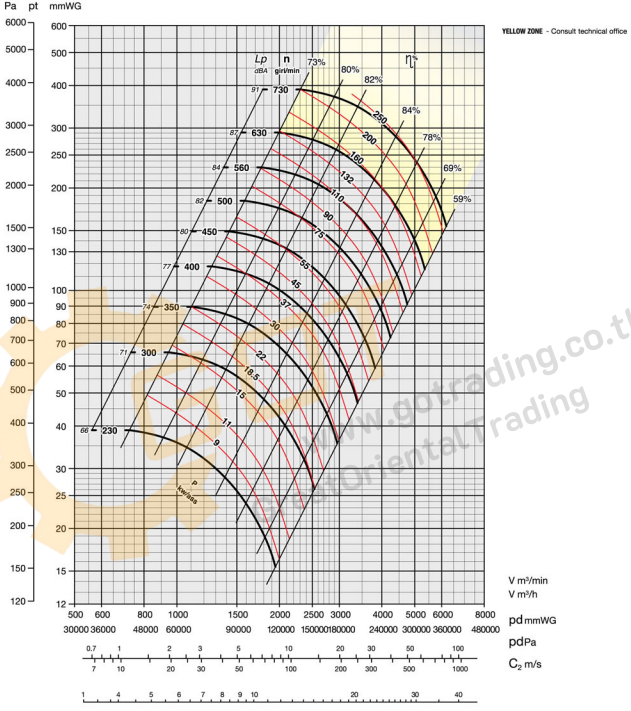

Maximum admissible rounds:

<100°C = 730 rounds/min.
100–200°C = 480 rounds/min.
200–350°C = 380 rounds/min.

Noise level tolerance + 3 dBA

KW consumed fan tolerance ± 3%

www.pptrading.co.th
Oriental Trading

SERIES LNb 2001 SPECIFICATIONS

OVERALL DIMENSIONS in mm

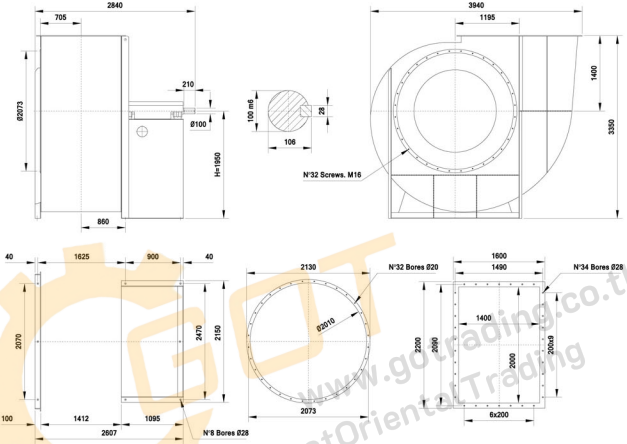

www.gotrading.co.th
GreatOrientalTrading

PD^2
GD^2 = 1950 kgm²

Weight kg 3300

The fan is not revolvable

UNI ISO 13349 rules orientations (transmission side)

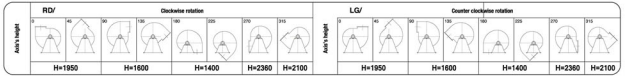

Bedplate (Esec. 12)

MOTOR TYPE	M 80-90-100 M 112-132	M 160-180 M 200-225	M 250-280 M 315	M 280+
G	530	850	1120	1400

LNb 401-561

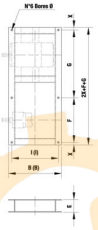

LNb 631-711

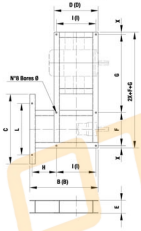

LNb 801-2001

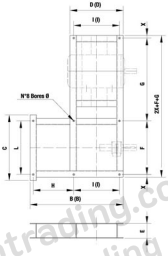

Dimensions

Series	Class	mm													Weight
		B	(B)	C	D	(D)	E	F	X	H	I	(I)	L	Ø	kg
LNb 401	1-2	415	455	–	–	–	100	350	20	–	365	405	–	14	18
LNb 451	1-2	415	455	–	–	–	100	350	20	–	365	405	–	14	18
LNb 501	1	415	455	–	–	–	100	350	20	–	365	405	–	14	18
LNb 501	2	480	520	–	–	–	100	360	25	–	430	470	–	17	24
LNb 561	1	425	465	–	–	–	100	350	20	–	375	415	–	14	18
LNb 561	2	480	520	–	–	–	100	360	25	–	430	470	–	17	24
LNb 631	1-2	1030	1070	820	480	520	100	360	75	555	430	470	710	17	35
LNb 711	1-2	1081	1121	920	530	530	125	360	25	600	430	470	800	17	45
LNb 801	1-2	1221	1281	990	555	615	150	870	30	661	495	555	870	17	76
LNb 901	1-2	1286	1346	1090	555	615	150	970	30	731	495	555	970	19	85
LNb 1001	1-2	1488	1488	1220	670	670	180	1060	40	818	600	600	1060	21	118
LNb 1121	1-2	1588	1588	1350	680	680	180	1200	35	912	600	600	1200	21	127
LNb 1251	1	1683	1683	1520	680	680	180	1320	40	1008	600	600	1320	24	130
LNb 1251	2	1768	1768	1520	750	750	180	1320	40	1023	670	670	1320	24	140
LNb 1401	1	1873	1873	1660	750	750	180	1500	40	1123	670	670	1500	24	175
LNb 1401	2	1973	1973	1660	830	830	180	1500	40	1143	750	750	1500	24	190
LNb 1601	1	2095	2095	1860	830	830	180	1700	40	1263	750	750	1700	24	220
LNb 1601	2	2140	2140	1860	880	880	180	1700	40	1258	800	800	1700	24	240
LNb 1801	–	2457	2457	2150	980	980	250	2x915	40	1477	900/870	900/870	2x915	28	780
LNb 2001	–	2607	2607	2390	980	980	250	2x1035	40	2x813	900/870	900/870	2x1035	28	815

(B) - (D) - (I) Fan with cooling fan

GOT
www.gotrading.co.th
GotOrientalTrading

Accessories

Circular flow regulators

OVERALL DIMENSIONS in mm

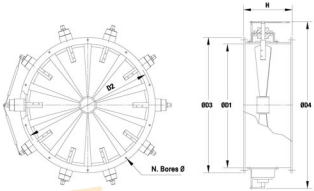

Type	D_1	D_2	D_3	D_4	H	n°	Bores Ø	Weight kg
280	280	332	366	450	280	8	11,5	24
315	321	366	400	570	280			30
355	361	405	440	610	280			33
400*	406	448	485	650	315	12		36
450	456	497	535	700	315			40
500	506	551	585	820	355			53
560	568	629	666	880	355	16		60
630	638	698	736	990	355			68
710	718	775	816	1070	355			75
800	808	861	906	1160	400		14	85
900	908	958	1006	1260	400			100
1000	1008	1067	1107	1360	400	24		130
1120	1130	1200	1248	1480	450			160
1250	1260	1337	1380	1610	450			180
1400*	1420	1491	1540	1760	450		16	210
1600*	1610	1663	1730	1960	500			230
1800	1810	1880	1930	2200	500	32	20	280
2000	2010	2073	2130	2380	500			340

Rectangular flow regulators, outflow end

OVERALL DIMENSIONS in mm

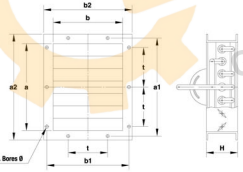

Type	a	b	a_1	b_1	a_2	b_2	H	t	n°	Bores Ø	Weight kg
90 x 63	90	63	112	90	150	123	130	-	4	9	2,2
100 x 71	100	71	125	100	160	131	130	-			2,5
112 x 80	112	80	140	112	172	140	130	112	6	11,5	2,7
125 x 90	125	90	165	130	185	150	130				3
140 x 100	140	100	182	141	210	170	130				3,3
160 x 112	160	112	200	153	230	182	130				3,8
180 x 125	180	125	219	167	250	195	130				4,5
200 x 140	200	140	241	182	270	210	130		8		5,3
224 x 160	224	160	265	200	294	230	130				6,5
250 x 180	250	180	292	219	320	250	130				7,5
280 x 200	280	200	332	249	360	280	130	125	10		8,5
315 x 224	315	224	366	273	395	304	130				9,6
355 x 250	355	250	405	300	435	330	130				11
400 x 280	400	280	448	332	484	368	130				13
450 x 315	450	315	497	366	533	402	130				18
500 x 355	500	355	551	405	587	441	150		14		21
560 x 400	560	400	629	464	669	504	150	160		14	26
630 x 450	630	450	698	513	738	553	180				30
710 x 500	710	500	775	567	815	607	180		16		34
800 x 560	800	560	871	639	921	689	200	200	14		42
900 x 630	900	630	968	708	1018	758	200		18		48
1000 x 710	1000	710	1077	785	1127	835	200				65
1120 x 800	1120	800	1210	881	1270	941	220		20	18	80
1250 x 900	1250	900	1347	978	1407	1038	220		24		95
1400 x 1000	1400	1000	1501	1087	1560	1160	250				110
1600 x 1120	1600	1120	1683	1220	1760	1280	250		28		150
1800 x 1250	1800	1250	1876	1357	1960	1410	280		32	22	200
2000 x 1400	2000	1400	2093	1511	2180	1580	280		34		280

External **flow regulator** designed for dusty air, sturdy construction, for industrial use.
Layout 1 = max. temperature 120°C.
Layout 2 = from 120 to 350°C. + pression ≥ 700 mm H_2O.

GOTECH
www.gotechcooling.co.vn
Green Technology Cooling

Accessories

Louver flow regulators

OVERALL DIMENSIONS in mm

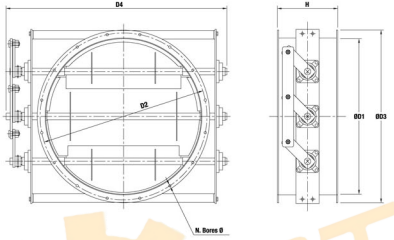

Type	D_1	D_2	D_3	D_4	H	Weight kg
315	315	366	400	640	280	21
355	355	405	440	680	280	23
400*	400	448	485	720	315	29
450	450	497	535	770	315	32
500	500	551	585	820	355	60
560	560	629	666	900	355	75
630	630	698	736	1040	355	80
710	710	775	816	1130	355	86
800	800	861	906	1220	400	93
900	900	958	1006	1320	400	110
1000	1000	1067	1107	1420	400	126
1120	1120	1200	1248	1560	450	160
1250	1250	1337	1380	1690	450	192
1400	1400	1491	1540	1860	450	260
1600	1600	1663	1730	2050	500	320

Butterfly flow regulators

OVERALL DIMENSIONS in mm

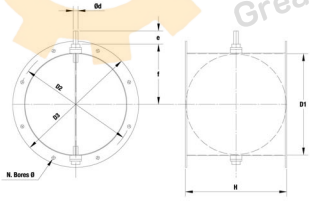

Type	D_1	D_2	D_3	d	e	f	H	n°...Bores Ø	Weight kg
140	140	182	215	14	30	110	140	8 - 11,5	2,8
160	160	200	235	14	30	120	160	8 - 11,5	3,2
180	180	219	255	14	30	130	180	8 - 11,5	4
200	200	241	275	16	30	140	200	8 - 11,5	4,8
224	224	265	299	16	30	150	224	8 - 11,5	5,5
250	250	292	325	16	45	165	250	8 - 11,5	6,5
280	280	332	366	16	45	180	280	8 - 11,5	8,5
315	315	366	401	16	45	195	315	8 - 11,5	10,5
355	355	405	441	16	45	215	355	8 - 11,5	13,5
400*	400	448	486	16	45	240	400	12 - 11,5	18
450	450	497	535	20	60	280	450	12 - 11,5	23
500	500	551	585	20	60	305	500	12 - 11,5	29
560	560	629	666	20	60	335	560	16 - 11,5	36
630	630	698	736	20	60	370	630	16 - 13	47
710	710	775	816	20	60	410	710	16 - 13	61
800	800	861	906	30	70	455	800	16 - 13	80
900	900	958	1006	30	70	505	900	16 - 13	100
1000	1000	1067	1107	30	70	555	1000	24 - 14	155
1120	1120	1200	1248	30	70	615	1120	24 - 14	190

GOT
www.gottrading.co.th
GreatOne Trading

Accesssories

Vibration-damping couplings outflow-end

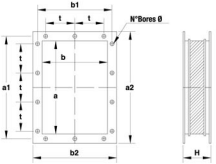

Series	mm								Bores		Weight
	a	b	a_1	b_1	a_2	b_2	t	H	n°	Ø	kg
90 x 63	90	63	112	90	150	123	-	140	4	11	1
100 x 71	100	71	125	100	160	131	-	140	4	11	1,1
112 x 80	112	80	140	112	172	140	-	140	4	11	1,3
125 x 90	125	90	165	130	185	150	100	140	6	11	1,6
140 x 100	140	100	182	141	210	170	112	140	6	12	2,1
160 x 112	160	112	200	153	230	182	112	140	6	12	2,6
180 x 125	180	125	219	167	250	195	112	140	6	12	3,2
200 x 140	200	140	241	182	270	210	112	140	8	12	3,9
224 x 160	224	160	265	200	294	230	112	140	8	12	4,6
250 x 180	250	180	292	219	320	250	112	140	10	12	5,5
280 x 200	280	200	332	249	360	280	125	140	10	12	7
315 x 224	315	224	366	273	395	304	125	140	10	12	8,2
355 x 250	355	250	405	300	435	330	125	140	10	12	10
400 x 280	400	280	448	332	480	360	125	140	14	12	11,2
450 x 315	450	315	497	366	530	395	125	140	14	12	13
500 x 355	500	355	551	405	580	435	125	160	14	11,5	14,5
560 x 400	560	400	629	464	660	500	160	160	14	14	18
630 x 450	630	450	698	513	730	550	160	160	14	14	19,5
710 x 500	710	500	775	567	810	600	160	160	16	14	22
800 x 560	800	560	871	639	930	690	200	160	14	14	31
900 x 630	900	630	968	708	1030	760	200	160	18	14	37
1000 x 710	1000	710	1077	785	1130	830	200	200	18	14	45
1120 x 800	1120	800	1210	881	1270	940	200	200	20	18	56
1250 x 900	1250	900	1347	978	1400	1040	200	200	24	18	65
1400 x 1000	1400	1000	1501	1087	1550	1160	200	200	24	18	80
1600 x 1120	1600	1120	1683	1220	1760	1280	200	200	28	22	100
1800 x 1250	1800	1250	1876	1357	1960	1410	200	200	32	22	130
2000 x 1400	2000	1400	2093	1511	2180	1580	200	200	34	22	165

Vibration-damping couplings intake-end

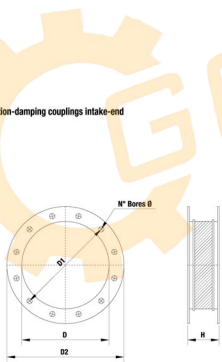

Series	mm				Bores		Weight
	D	D_1	D_2	H	n°	Ø	kg
140	140	182	215	140	8	11,5	3
160	160	200	235	140	8	11,5	3,2
180	180	219	255	140	8	11,5	3,5
200	200	241	275	140	8	11,5	3,8
224	224	265	299	140	8	11,5	4,2
250	250	292	325	140	8	11,5	5
280	280	332	366	140	8	11,5	6,8
315	315	366	401	140	8	11,5	7,5
355	355	405	440	140	8	11,5	9
400 *	400	448	485	140	12	11,5	10
450	450	497	535	140	12	11,5	11,5
500	500	551	585	160	12	11,5	13
560	560	629	666	160	16	11,5	16
630	630	698	736	160	16	13	17,5
710	710	775	816	160	16	13	20
800	800	861	906	160	16	13	22
900	900	958	1006	160	16	13	25
1000	1000	1067	1107	200	24	14	28
1120	1120	1200	1248	200	24	14	42
1250	1250	1337	1380	200	24	14	46
1400*	1400	1491	1540	200	24	16	52
1600*	1600	1663	1730	200	24	16	62
1800	1810	1880	1930	200	32	18	85
2000	2010	2073	2130	200	32	18	110

www.gotrading.com
Great Brands Great Prices

Accessories

Protection Net

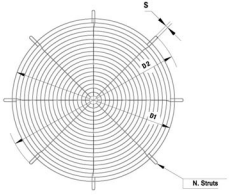

Dn	D_1 (mm)	D_2 (mm)	S (mm)	N° Struts
125				
140	140	220	12	4
160				
180				
200	212	285	12	4
224				
250				
280	312	385	12	4
315				
355	357	430	12	4
400	408	470	12	4
450	450	528	12	4
500	500	580	16	4
560	562	650	16	4
630	620	720	16	8
710	710	800	16	8
800	795	895	16	8
900	890	990	16	8
1000	990	1130	18	8
1120	1115	1250	18	8
1250	1245	1400	20	8
1400	1405	1560	20	8
1600	1595	1750	20	8
1800	1795	1950	20	8
2000	1995	2150	20	8

ISOLATOR

TYPE A

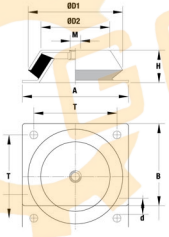

Type	A	B	H	M	T	d	D1	D2
MOD 58540	108	108	40	12	88	9	101	75
MOD 33629	168	168	50	16	132	13	136	125
MOD 58541	200	200	70	20	165	13	192	170

TYPE B

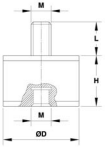

Type	D	H	M	L
B_D3020	30	20	8	20
B_D3030	30	30	8	20
B_D4030	40	30	8	23
B_D4040	40	40	8	23
B_D5020	50	20	10	28
B_D5030	50	30	10	28
B_D5045	50	45	10	28
B_D7045	70	45	10	30
B_D7540	75	40	12	37
B_D7555	75	55	12	37
B_D10040	100	40	16	45
B_D10055	100	55	16	45
B_D10075	100	75	16	45

(Quote = mm)

www.gotrading.co.th
GreatOrientTrading

SECTION

Esec. 1

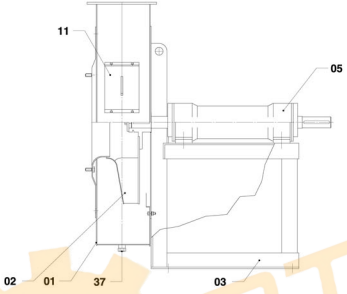

SPARE PARTS

01 - CASE
02 - IMPELLER
03 - BASE
04 - MOTOR
05 - SUPPORT
06 - NOZZLE
07 - TURNING BASE
* 09 - SUCKING COUNTERFLANGE
* 10 - PRESSING COUNTERFLANGE
* 11 - INSPECTION DOOR
15 - BELT PROTECTION CASE
16 - CONNECTIME PIPE
17 - COOLING FAN PROTECTION
* 18 - SHOCK ISOLATING MOUNTINGS
19 - GREASE PROTECTION RING
22 - KEY
23 - COOLING FAN
24 - LUBRIFICATOR
25 - BEARING
26 - SHAFT
27 - CASE
28 - CAP
29 - PROTECTION RING
30 - COVER
31 - HOUSING
32 - FIXING COLLARS
33 - LOCKING COMPASS
34 - RING NUT
35 - SECURITY WASHER
36 - SEMI-ELASTIC JOINT
* 37 - DISCHARGE CAP
* 38 - SUCKING FLEXIBLE JOINT
* 39 - PRESSING FLEXIBLE JOINT
* 40 - CIRCULAR FLOW REGULATOR
* 41 - RECTANGULAR FLOW REGULATOR
* 43 - PROTECTION NET

Esec. 9

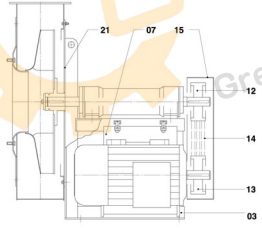

Esec. 12

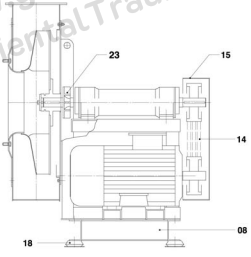

GOT
www.gotrading.co.th
GreatOrientalTrading

SECTION

Support monobloc

Frame size

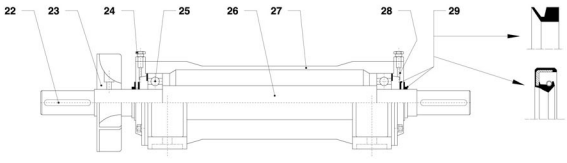

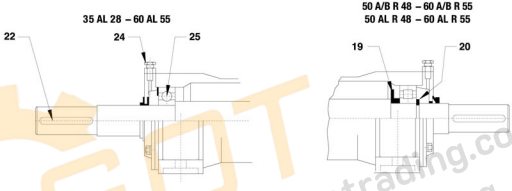

Frame size

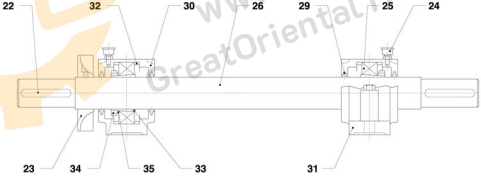

GOT
www.gotrading.co.th
GreatOrientalTrading

SPARE PARTS

15 - BELT PROTECTION CASE
17 - COOLING FAN PROTECTION
18 - SHOCK ISOLATING MOUNTINGS
19 - SEALING RING
20 - SEEGER RING
22 - KEY
23 - COOLING FAN
24 - LUBRIFICATOR
25 - BEARING
26 - SHAFT
27 - CASE
28 - CAP
29 - PROTECTION RING
30 - COVER
31 - HOUSING
32 - FIXING COLLARS
33 - LOCKING COMPASS
34 - RING NUT
35 - SECURITY WASHER
37 - DISCHARGE CAP
38 - SUCKING FLEXIBLE JOINT
39 - PRESSING FLEXIBLE JOINT
40 - CIRCULAR FLOW REGULATOR
41 - RECTANGULAR FLOW REGULATOR
43 - PROTECTION NET

Inquiry for Eurovent Blower

Subject : _____ Data : _____
From : Job No.: _____
Company _____
Contact _____
Tel : _____
Fax : _____ E-mail : _____

Fan Specification

Technical Data Information		
Model	m^3/min	
Air volume	mm Wg	
Staic pressure	mm Wg	
Total pressure	°C	
Service Temperature	rpm	
Fan speed	KW	
Motor	%	
Efficiency		
Colour (Standard Green)		
Qty .	Set	

Construction

Type	☐ Centifugal ☐ Axial ☐ Propeller ☐ recommended by vendor
Power Transmission	☐ Direct ☐ Belt ☐ recommended by vendor
Position (see table 1)	
Accessory	☐ Inlet Damper ☐ Outlet Damper ☐ Filter ☐ Expansion joint ☐ Inspection Hole ☐ Drain with plug

Application

if replace for old blower please give original information.

**** Do not use direct drive for hot air fan**

This information above is for guideline only , fan supplier should re-check and select the proper solutions.

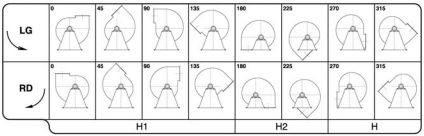

Table 1 Show position

Please send to

E-mail : info@euroventblower.com

Checked by	Approve by

www.greatoriental-trading.co.th
GreatOrientalTrading

EuroVent

www.gotrading.co.th
GreatOrientalTrading

บริษัท เกรทโอเรียนเต็ล เทรดดิ้ง จำกัด
เลขที่ 1049 ถนนรวมธรรม
ตำบลคอหงส์ อำเภอหาดใหญ่
จังหวัดสงขลา 90110
074-300212-4

GOT
www.gotrading.co.th
GreatOrientalTrading
097-361-9703
GreatOrientalTrading
@gotrading