www.gotrading.co.th
GreaOrintalTrading

Centrifugal Fan

Series
MN MO
MP MR

EuroVent

MN_MO-MP-MR_Catalog.indd 1 04/03/2015 3:31:53 PM

Symbols and measurement units used in the catalogue.

V m³/min = Delivery in m³/min
V m³/h = Delivery in m³/h
pt mmH_2O = Total pressure in mm H_2O
pt Pa = Total pressure in Pascal
pd mmH_2O = Dynamic pressure in mm H_2O
pd Pa = Dynamic pressure in Pascal
c2 = Speed in m/s on pressing throat
n = Fan rounds
Lp = Noise level indicated in dB/A
P = Power absorbed in kW
η = Fan output

Table of positions of discharge

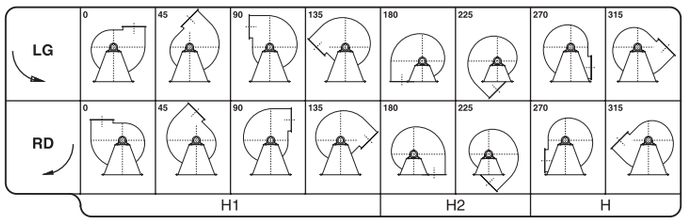

Fans constructive executions in conformity with rules UNI EN ISO 13349 (2009).

EXECUTION 1
For belt drive.Whee keyed overhung.Supports mounted on a base outside the air stream. Max air temperature 90 °C without cooling fan; 350 °C when fitted with cooling fan.

ESEC. 1

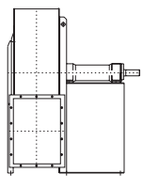

EXECUTION 4
For direc drive. Wheel keyed to motor shaft.Motor is supported by the base. Max air temperature 80 °C; when fitted with cooling fan 150 °C.

ESEC. 4

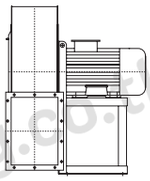

EXECUTION 5
For direct drive.Wheel keyed to motor shaft.Motor is supported by the case.Max air temperature 60 °C; when fitted with cooling fan 130 °C.

ESEC. 5

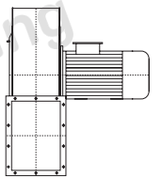

EXECUTION 9
For belt drive.Same as arrangement 1 with motor supported by the side wall of base.Max air temperature: 90 °C without cooling fan; 350 °C when fitted with cooling fan.

ESEC. 9

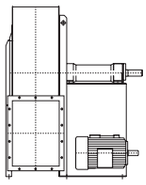

EXECUTION 12
For belt drive.Same as arrangement 1 with both fan and motor supported by the foundation frame. Max.air temperature: 90 °C without cooling fan; 350 °Cwhen fitted with cooling fan.

ESEC. 12

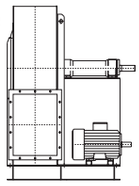

Plan for motor positioning belt drive.

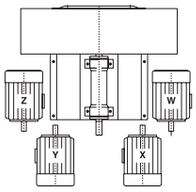

www.gotrading.co.th
GreatOrientalTrading

MN_MO-MP-MR_Catalog.indd 2
04/03/2015 3:31:54 PM

General concepts abouts centrifugal fans

The centrifugal fan essentially in a scroll in which a wheel rotates. The wheel's movement is caused by an external energy source, that is usually an electric motor. The main characteristics of a centrifugal fan are:

a) delivery c) efficiency
b) pressure d) rotation speed

DELIVERY

It is indicated by the value of the fluid intaken through the fan in the time unit;normally this is stated by the ratio m^3/sec., m^3/min., or m^3/h.

PRESSURE

It is usually indicated by the ratio kgf/m^2 or Pa. The pressure generated through a fan is named TOTAL (pt);it is the sum of two different pressures:STATIC + DYNAMIC.The static pressure (p.s.) is the potential energy that wins the circuit resistance when the fluid is passing through the circuit.The dynamic pressure (pd) is the kinetic energy of the moving fluid and it depends on the medium exit speed of the air from the fan throat; the formula is:

$$pd = \frac{C^2}{2g} \bullet 1.226 \qquad C = \frac{V}{A}$$

where:
V = delivery m^3/sec.
A = throat surface m^2
c = medium speed of the air m/sec.
g = acceleration of gravity (9,81 m/sec)
1,226 = air specific gravity kg/m^3at 15°C and 760 mm Hg.

ENERGY

It consists in the radio between the energy sypplied by the fan to the fluid and the energy used by the external source to put in operation the fan.
The formula is:

$$\eta = \frac{V \bullet pt}{6120 \bullet P}$$

where:
V = delivery m^3/min.
pt = total pressure kgf/m^2
P = used energy by the fan indicated in kW
η = fan efficiency

ROTATION SPEED

It is indicated by the number of roundes per minute:at this speed the wheel must rotate in order to get the required performances. N.B.The following tables show the characteristics of an operating device at air 15°C, barometric pressure 760 mm Hg, specific gravity 1,226 kg/m^3, test according to UNI ENISO 5801:2009 (UNI 10531:1995) rules.If customer wishes get different perfomances with intermediary value in respect of the value shown in the tables or if he prefers a device operating with air suction at different temperature in respect of 15°C and with different specific gravity in respect of 1,226 we suggest to follow these rules the characteristics of fans change according to the variation in speed rotation and considering the specific gravity of the fluid intaken.

a) Variation of rotation speed (n) with air specific gravity constant.
1. The delivery (V) varies directly with rotations ratio:

$$V_1 = V \bullet \frac{n^1}{n}$$

2. The pressure varies with square number of rotations ratio:

$$pt_1 = pt \bullet \left(\frac{n^1}{n}\right)^2$$

3. The energy (P) varies with cube of rotations ratio:

$$p_1 = P \bullet \left(\frac{n^1}{n}\right)^3$$

b) Variations of specific gravity (γ) of the air when rotation speed is constant.

1. The delivery (V) remains constant.
2. The pressure (pt) and the energy (P) vary directly with the ratio of specific gravities.

$$pt_1 = pt \bullet \frac{\gamma^1}{\gamma} \qquad P_1 = P \bullet \frac{\gamma^1}{\gamma}$$

The specific gravity of the air at different temperatures is obtained through the formula:

$$\gamma = \frac{1{,}293 \bullet 273}{(273+t)} \ (kg/m^3)$$

The air density depensing on a change of the atmospheric pressure is given by the following formula:

$$\gamma = \frac{Pb \bullet 13.59}{29.27 \bullet (273 + t)} \ (kg/m^3)$$

where:
γ = specific gravity at °C
1,293 = specific gravity of the air at 0°C
t = air temperature indicated in °C
273 = absolute zeto
Pb = atmospheric pressure mm Hg

This table shows directly the air specific gravity at different temperatures:

t°C	-20	-10	0	+10	+15	+20	+30	+40	+50	+60	+70	+80	+90	+100	+120	+140	+160	+180	+200	+220	+240	+260	+280	+300	+325	+350
γ	1,396	1,342	1,293	1,248	1,226	1,205	1,165	1,128	1,093	1,060	1,029	1,000	0,973	0,947	0,90	0,85	0,82	0,78	0,75	0,72	0,69	0,66	0,64	0,62	0,59	0,56

Atmospheric pressure depending on altitude above sea-level:

mt	0	500	1000	1500	2000	2500	3000	3500	4000	4500
Pb mm Hg	760	720	680	640	600	560	530	500	470	440

www.gotrading.co.th GreatOrientalTrading

MN_MO-MP-MR_Catalog.indd 3 04/03/2015 3:31:54 PM

CHARACTERISTICS

The features listed in the diagrams are refered to air at the temperature of + 15°C and at the barometrical pressure of 760 mm. Hg with specific gravity 1,226 Kg/m³.

NOISE LEVEL

The noise level values indicated are expressed in decibel scale A (dB/A) they are understood measured in a free range at the distance of **1.5 m** from the fan operating with the highest output capacity, connected to inlet and outlet pipe connections (rules UNI EN ISO 3740-3744-3746-13347).

ORIENTATIONS

All the fans can be constructed with the delivery mouth in 16 different positions (8 in clockwise rotation RD and 8 in counterclockwise rotation LG) as indicated on the orientation tables. Please note that the direction of rotation is determined by looking at the fan from the transmission side. Some sizes of these fans are revolvable always considering the rotation direction. This information is indicated at the end of the various tables of the overall dimensions. Flange see DIN 24154-24158.

ACCESSORIES (delivery on request)

- **intaking and pressing counterflange;**
- **inspection door:** to inspect and to clean the wheel and the scroll inside;
- **discharge cap:** it eliminates the condensate if any inside the fan and it is situated on the lowest part of the scroll.
- **vibrating proof joints in intaking and pressing time:** they are used to avoid the spreading of vibrations to the pipes;
- **safety grate for intaking throat:** it is used to avoid accidents when the fan is intaking from the room;
- **regulation lock on delivery:** it is used to regulate the fan delivery;
- **regulator of the flow rate in intaking time:** it is used to regulate the fan flow rate and it maintains high the efficiency level, also in regulating time.

SPECIAL CONSTRUCTIONS

Spark proof construction: when explosive fluids are carried or when the plant is installed in dangerous environments, the parts that come into contact with the intaken fluid are constructed by material without iron content to avoid rubbing, motor on request is supplied in special construction.
Corosionproofing construction: when corrosive fluids are carried, the parts that come into contact with the fluid are painted with special paints or they are constructed with special materials as austentic stainless steels (AISI 304-316 etc.).Constructions can be effected according to the customer's particular needs.

SOME VALUES OF AIR SPEED THAT MUST BE OBSERVED INSIDE THE IRON PIPES FOR SUCTION PLANTS, RELATING TO FOLLOWING MATERIALS:

Cereals dust	16–19 m/s
Varnish dust	15–18 m/s
Wooden shaving and sawdust	18–24 m/s
Dry dust of chemicals	17–20 m/s
Coal dust	20–25 m/s
Dust of plastic material working	18–23 m/s
Foundry fumes	15–18 m/s
Lapping sharpening and bufing wheels	20–25 m/s
Fumes of solvents for degreasing	12–17 m/s
Metallic shaving and dust	25–38 m/s
Rubber dust	17–20 m/s
Any toxic dust	15–25 m/s
Zinc oxide dust	18–21 m/s
Saw dust of marble	20–25 m/s
Hides buffing	18–23 m/s

SOME DATA ABOUT THE NUMBER OF THE AIR CHANGINGS FORESEEN IN CIVIL, INDUSTRIAL AND AGRICULTURAL ENVIRONMENTS:

Enviroments	No. changings/hour
Hen - hutch	8
Bovine - swine breeding	10
Hotel halls -rooms - corridors	4
Garages	8
Banks	6
Bathrooms - showerbaths	6
Galvanic baths	25
Carpenter shops - welding shops	12
Heating plants	60
Churches	15
Coffee - houses - bars - restaurants	10
Cinemas - theatres	15
Dye works	15
Tanneries	18
Hide drying processes	35
Facrories for rubber production	12
Factories for alimentary pastes	6
Factories for chemicals production	15
Joineries	6
Spinning - and weaving mills	5
Foundries	25
Forge shops	25
Steam laundries	30
Rooms for electric furnaces	30
Rooms for furnace	20
Warehouses for perishable goods	15
Warehouses for unperishable goods	5
Tobacco manufactures	12
Grinding mills	20
Shops	5
Hospitals	6
Gymnasiums	20
Baker shops	15
Swimming-pools	25
Dance-halls	20
Card-rooms	10
Waiting-rooms	10
Schools	6
Metallurgical works	5
Supermarkets	5
Dyeing plants	30
Printing shops	20
Toilettes	30
Technical departments	15

www.gotrading.co.th
GreatOrientalTrading

MN_MO-MP-MR_Catalog.indd 4 04/03/2015 3:31:57 PM

series MN-MO-MP-MR SPECIFICATIONS

USE:

For sucking in very dusty air containing various types of materials in suspension.The main feature of these types of fans is the association of high output (deriving from the use of a rotor with reversed blades, special profile), with the suction of dusty fluids or those containing granular materials.Besides these fans are characterized by a very flat curve of the absorbed power, in order not to overload the motor neither when working with open inlets.They are assembled in joineries for transporting saw dust and wooden shavigs, **excluding filamentaus material**, in mechanical industries for sucking in metal chips, in pneumatic transport of the cement factories, ceramic factories, mills , fodder factories, tanneries, founderies, in textil and chemical Industries and in general in all those apllications where it is necessary to transport harmful air with low and medium pressure.The temperature of the fluid sucked in must not exceed 80°C.For higher temperatures it is necessary to make some changes on the construction of the fan.

Operating range
2 - 4 - Poles

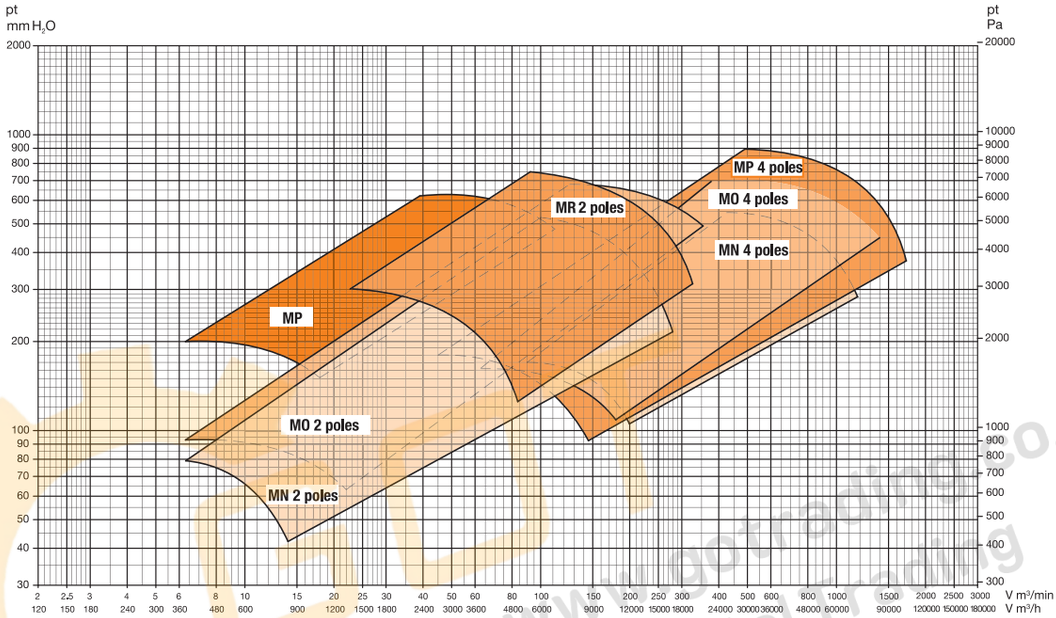

www.gotrading.co.th
GreatOriental Trading

MN_MO-MP-MR_Catalog.indd 5 04/03/2015 3:31:58 PM

SERIES MN SPECIFICATIONS

Type		kW ass.	kW inst.	n. min.$^{-1}$	Lp dB/A	V = m³/min																
						6,3	8	10	14	18	22	25	28	31	35	40	45	50	56	63	71	
Fan	Motor					Pt = mm H_2O																
MN 221	63 A2	0,17	0,18	2750	62	79	75	65	42													
MN 251	71 A2	0,35	0,37	2750	65		102	100	88	73	55											
MN 281	71 B2	0,5	0,55	2750	68			130	123	112	100	90	80	65								
MN 312	80 A2	0,7	0,75	2830	71				145	135	122	110	100	90	70							
MN 311	80 B2	0,95	1,1	2830	72					160	158	148	138	127	112	95	76					
MN 352	90 S2	1,4	1,5	2850	72							185	180	175	168	160	143	130	112	100		
MN 351	90 L2	2,1	2,2	2850	73								215	210	205	190	175	160	145	125	100	
MN 402	100 LA2	2,8	3	2900	76										240	238	235	220	205	190	160	
MN 401	112 M2	3,8	4	2900	77											280	275	270	260	240	215	
MN 452	132 SA2	5,3	5,5	2900	81												310	305	300	290	275	
MN 451	132 SB2	7,1	7,5	2900	82														355	350	340	
MN 502	132 MB2	8,7	9	2900	83															385	380	
MN 501	160 MR2	10,5	11	2930	84																440	
MN 562	160 M2	14,5	15	2930	86																	
MN 561	160 L2	17,5	18,5	2930	87																	
MN 631	132 SA4	5	5,5	1440	73																	
MN 712	132 MA4	6,8	7,5	1450	74																	
MN 802	160 M4	10,5	11	1460	78																	
MN 801	160 L4	14	15	1470	79																	
MN 902	180 L4	21,5	22	1470	82																	
MN 901	200 L4	29	30	1470	83																	
MN 1002	225 S4	35	37	1475	86																	
MN 1001	225 M4	43	45	1475	87																	
MN 1122	280 S4	72	75	1475	88																	
MN 1121	280 M4	85	90	1475	90																	

Capacity tolerance ± 5 %
Noise level tolerance + 3 dB

www.gotrading.co.th
GreatOrientalTrading

	V = m³/min																							
	80	90	100	112	125	140	160	180	200	225	250	280	315	355	400	450	500	560	630	710	800	900	1000	1120
	Pt = mm H_2O																							
	130																							
	190	160	130																					
	250	230	205	170																				
	325	305	280	250	210	175																		
	370	355	340	315	285	240	200																	
	436	430	410	385	360	320	285	225																
		480	475	450	430	400	370	320	290	240	200													
			530	520	510	490	455	410	385	340	280	220												
		170	170	170	165	155	140	125	105															
					200	200	190	180	165	140	125	100												
								240	230	220	195	175	155	130	100									
								270	270	260	245	230	212	165	160									
											300	295	290	280	270	240	210	170						
											340	340	330	320	305	285	255	220						
													400	390	365	340	315	290	260	220	190			
													440	430	420	400	370	340	310	260	250			
																485	482	475	456	431	400	360	312	258
																546	540	527	509	488	460	425	376	315

Pa (Pascal) = mm H_2O x 9,807

www.gotrading.co.th
GreatOrientalTrading

SERIES MO SPECIFICATIONS

Type		kW ass.	kW inst.	n. min.$^{-1}$	Lp dB/A	V = m³/min															
						14	18	22	25	28	31	35	40	45	50	56	63	71	80	90	
Fan	Motor					Pt = mm H_2O															
MO 311	80 B2	0,95	1,1	2850	67	153	152	149	145	140	135	129	119	108							
MO 351	90 L2	2,1	2,2	2850	70			208	207	205	202	198	190	182	174	160	145				
MO 401	112 M2	3,8	4	2900	74					265	265	264	262	258	252	245	236	220	208	188	
MO 451	132 SB2	7	7,5	2900	77								340	340	340	338	330	322	312	300	
MO 501	160 MA2	10,5	11	2920	81											422	422	420	418	410	
MO 562	160 MB2	14	15	2930	83													435	435	435	
MO 561	160 L2	18	18,5	2930	84															510	
MO 632	200 LR2	27	30	2950	87																
MO 631/A	200 L2	36	37	2950	88																
MO 631/B	132 SA4	4,8	5,5	1440	71												160	159	158	156	
MO 712	132 MA4	7	7,5	1450	72															175	
MO 802	160 M4	10	11	1460	76																
MO 801	160 L4	13,5	15	1470	77																
MO 902	180 L4	2	22	1470	79																
MO 901	200 L4	27	30	1470	80																
MO 1002	225 S4	32	37	1475	83																
MO 1001	225 M4	43	45	1475	84																
MO 1122	250 M4	54	55	1475	86																
MO 1121	280 S4	74	75	1475	87																
MO 1252	315 S4	104	110	1475	89																
MO 1251	315 M4	130	132	1475	90																
MO 1401	315 S6	72	75	985	83																

Capacity tolerance ± 5 %
Noise level tolerance + 3 dB

www.gotrading.co.th
GreatOrientalTrading

MN_MO-MP-MR_Catalog.indd 8 04/03/2015 3:31:59 PM

	V = m³/min																							
	100	112	125	140	160	180	200	225	250	280	315	355	400	450	500	560	630	710	800	900	1000	1120	1250	1400
	Pt = mm H_2O																							
	285	270	250																					
	400	390	375	355	325																			
	435	430	425	415	395	370	345	300																
	505	500	495	490	480	460	435	395	345															
			660	660	640	600	575	545	500	460	406													
			670	665	660	650	635	620	595	580	545	500												
	154	152	145	140	125	105																		
	174	173	172	168	162	155	145	130	120															
			208	207	205	202	199	195	185	167	145													
			262	261	258	255	252	247	242	235	212	183												
						310	308	306	303	298	291	281	263	230										
						351	350	349	348	345	340	320	300	280	255									
									355	353	350	342	330	310	300	270	240							
									425	423	420	415	410	395	380	370	340							
											490	483	472	460	445	428	405	375	338	290				
											550	548	542	533	525	510	495	470	445	412	365			
													625	620	615	605	595	580	555	525	490	440	385	
													695	695	691	685	678	665	650	625	600	565	520	450
												385	385	385	384	380	375	365	350	335	315	295	275	245

Pa (Pascal) = mm H_2O x 9,807

www.gotrading.co.th
GreatOrientalTrading

SERIES MP-MR SPECIFICATIONS

Type		kW ass.	kW inst.	n. min.$^{-1}$	Lp dB/A	V = m³/min																	
						6,3	8	10	14	18	22	25	28	31	35	40	45	50	56	63	71	80	
Fan	Motor					Pt = mm H_2O																	
MP 352	80 A2	0,7	0,75	2830	68	200	198	195	175	150													
MP 351	80 B2	1,0	1,1	2830	69		240	238	220	205	185	170											
MP 402	90 S2	1,4	1,5	2850	72			280	275	265	245	230	215	195									
MP 401	90 L2	2,1	2,2	2850	73				305	305	300	290	280	270	240	215							
MP 452	100 LA2	2,8	3	2900	75					355	355	350	345	335	325	300	275	230					
MP 451	112 M2	3,8	4	2900	76						400	400	400	395	390	380	365	345	320	290			
MP 502	132 SA2	5,2	5,5	2900	78							460	460	460	460	455	445	430	415	395	350	305	
MP 501	132 SB2	7	7,5	2900	80								500	500	500	495	490	485	475	450	420	395	
MP 561	160 M2	9,2	11	2930	83									620	620	620	620	620	617	610	595	580	
MR 401	100 LA2	2,6	3	2900	68						300	300	295	290	285	275	260	245	225	200	170	140	
MR 451	132 SA2	4,6	5,5	2900	72									380	380	375	370	360	350	335	313	285	
MR 501	160 M2	9,5	11	2900	75												470	468	462	455	443	425	
MR 561	160 M2	13,5	15	2930	78															580	575	570	
MR 632	180 M2	21	22	2950	81																	680	
MR 631/A	200 LA2	28	30	2950	82																		
MR 631/B	112 M4	3,6	4	1440	68																		
MR 711	132 SA4	5,2	5,5	1440	71																		
MR 802	132 MA4	7,2	7,5	1450	73																		
MR 801	160 M4	10,5	11	1460	74																		
MR 902	160 L4	14	15	1460	76																		
MR 901	180 L4	20	22	1470	77																		
MR 1002	200 L4	27	30	1470	80																		
MR 1001	225 S4	34	37	1475	81																		
MR 1122	225 M4	43	45	1475	83																		
MR 1121	250 M4	52	55	1475	84																		
MR 1252	280 S4	72	75	1480	86																		
MR 1251	315 S4	95	110	1480	88																		
MR 1401	315 M4	156	160	1480	92																		

Capacity tolerance ± 5 %
Noise level tolerance + 3 dB

www.gotrading.co.th
GreatOrientalTrading

MN_MO-MP-MR_Catalog.indd 10 04/03/2015 3:31:59 PM

V = m³/min																									
90	100	112	125	140	160	180	200	225	250	280	315	355	400	450	500	560	630	710	800	900	1000	1120	1250	1400	1800
Pt = mm H_2O																									
340																									
550	520	480																							
250	218	180																							
405	380	348	310	263	205																				
560	545	525	500	465	415	365	310																		
670	664	650	635	613	574	530	485	420																	
750	745	735	725	705	675	643	605	547	490	420	340														
155	145	135	115	98	75																				
220	215	208	200	190	175	150	125																		
250	250	245	240	230	220	210	190																		
280	280	280	280	275	265	255	240	215	190	160	125														
			315	315	310	300	290	280	265	240	210	175													
			365	365	365	360	350	335	320	305	290	250	210												
						400	400	395	390	375	360	345	325	300	265										
						450	450	445	435	425	410	395	370	340	310	265	200								
									500	495	490	480	460	440	415	390	350								
									570	565	555	540	525	505	485	460	430	375	325	220					
											635	630	615	600	580	560	530	495	445	385	305				
												715	710	700	685	665	640	610	573	530	475	403	275		
															895	885	875	825	825	790	760	710	655	585	330

Pa (Pascal) = mm H_2O x 9,807

www.gotrading.co.th
GreatOrientalTrading

CHARACTERISTIC CURVE SERIES MN-MO-MP-MR

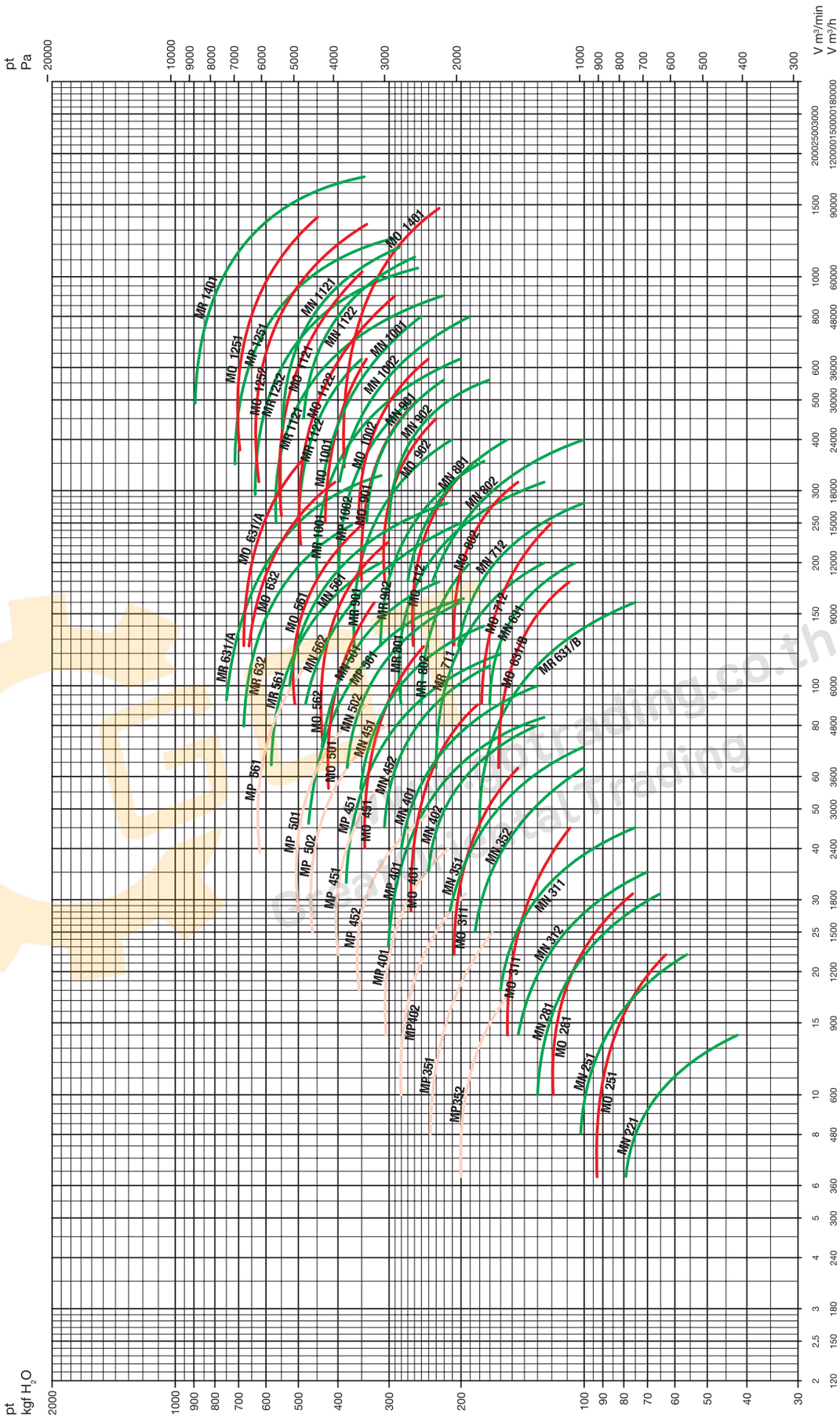

MN_MO-MP-MR_Catalog.indd 12 04/03/2015 3:32:00 PM

SERIES MN OVERALL DIMENSIONS AND WEIGHTS

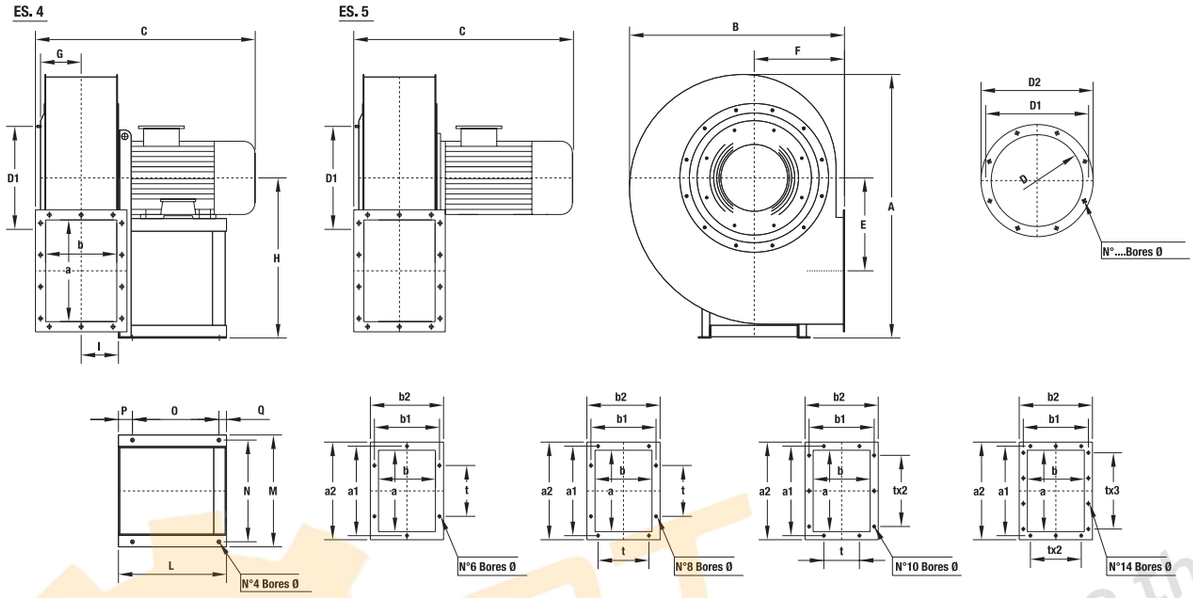

Table of discharge positions

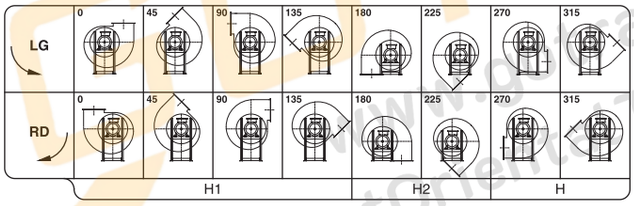

MN 221 – 631
The fan is revolvable

N.B.: For constructive reasons, the fans from size 451–501 follow an orientation with angles of 30° instead of 45°.

Type		Fan									Base								Inlet flange					Outlet flange									Weight	PD^2 / GD^2
Fan	Motor	A	B	C	E	F	G	H	H_1	H_2	I	L	M	N	O	P	Q	ø	D	D_1	D_2	N°	ø	a	b	a_1	b_1	a_2	b_2	t	N°	ø	Kg	Kg m^2
MN 221	63 A2	425	355	330	130	160	63	250	250	160	56	150	196	175	85	50	15	10	129	165	189	4	9,5	140	100	182	141	210	170	112	6	11,5	17	0,05
MN 251	71 A2	530	450	370	170	200	80	315	315	200	76	190	235	215	125	50	15	10	185	219	255	8	11,5	200	140	241	182	270	210	112	8	11,5	19	0,07
MN 281	71 B2	590	495	400	202	212	90	355	355	212	86	190	235	215	125	50	15	10	205	241	275	8	11,5	224	160	265	200	294	230	112	8	11,5	31	0,12
MN 312	80 A2	665	550	450	228	236	100	400	400	236	96	190	235	215	125	50	15	10	229	265	299	8	11,5	250	180	292	219	320	250	112	10	11,5	38	0,15
MN 311	80 B2	665	550	450	228	236	100	400	400	236	96	190	235	215	125	50	15	10	229	265	299	8	11,5	250	180	292	219	320	250	112	10	11,5	41	0,18
MN 352	90 S2	745	620	515	263	265	112	450	450	265	106	215	270	245	137	60	18	10	255	292	325	8	11,5	280	200	332	249	360	280	125	10	11,5	50	0,30
MN 351	90 L2	745	620	515	263	265	112	450	450	265	106	215	270	245	137	60	18	10	255	292	325	8	11,5	280	200	332	249	360	280	125	10	11,5	53	0,36
MN 402	100 LA2	830	695	610	292	300	125	500	500	300	120	260	332	300	200	35	25	12	286	332	366	8	11,5	315	224	366	273	395	304	125	10	11,5	70	0,5
MN 401	112 M2	830	695	610	292	300	125	500	500	300	120	260	332	300	200	35	25	12	286	332	366	8	11,5	315	224	366	273	395	304	125	10	11,5	71	0,7
MN 452	132 SA2	930	780	700	328	335	145	560	560	335	132	320	392	360	250	45	25	12	321	366	401	8	11,5	355	250	405	300	435	330	125	10	11,5	99	1,0
MN 451	132 SB2	930	780	700	328	335	145	560	560	335	132	320	392	360	250	45	25	12	321	366	401	8	11,5	355	250	405	300	435	330	125	10	11,5	100	1,1
MN 502	132 MB2	1040	850	730	365	355	160	630	630	355	148	320	392	360	250	45	25	12	361	405	441	8	11,5	400	280	448	332	480	360	125	14	11,5	133	1,5
MN 501	160 MR2	1040	850	865	365	355	160	630	630	355	148	425	440	400	340	55	30	14	361	405	441	8	11,5	400	280	448	332	480	360	125	14	11,5	148	1,6
MN 562	160 M2	1170	955	900	410	400	180	710	560	400	165	425	440	400	340	55	30	14	406	448	486	12	11,5	450	315	497	366	530	395	125	14	11,5	198	3,0
MN 561	160 L2	1170	955	900	410	400	180	710	560	400	165	425	440	400	340	55	30	14	406	448	486	12	11,5	450	315	497	366	530	395	125	14	11,5	202	3,6
MN 631	132 SA4	1315	1090	805	465	450	201	800	630	450	182	320	392	360	250	45	25	12	456	497	536	12	11,5	500	355	551	405	580	435	125	14	11,5	208	5,2

The above date are unbinding

Fan weight in kg (without motor)

www.gcgtrading.co.th
GreatCombineGTrading

SERIES MN OVERALL DIMENSIONS AND WEIGHTS

ES. 4

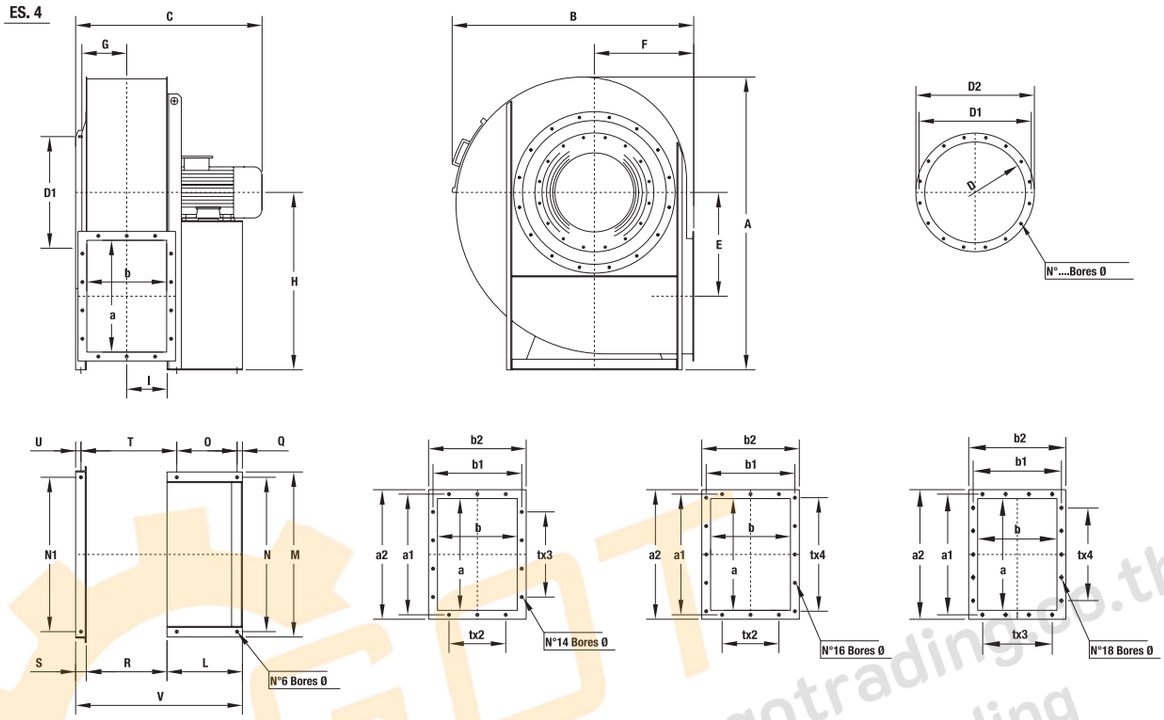

Table of discharge positions

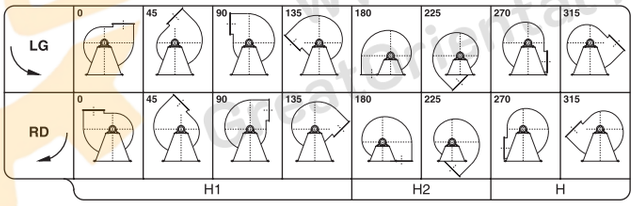

MN 712 – 1121

The fan is not revolvable

Type		Fan									Base												Inlet flange				Outlet flange									Weight	PD^2 GD^2
Fan	Motor	A	B	C	E	F	G	H	H_1	H_2	I	L	M	N	N_1	O	Q	R	S	T	U	V	ø	D	D_1	D_2	N°	ø	a	b	a_1	b_1	a_2	b_2	t	N°	ø	Kg	Kg m^2
MN 712	132 MA4	1490	1230	860	525	500	225	900	710	500	207	320	392	360	800	250	25	410	50	480	25	780	12	506	551	586	12	11,5	560	400	629	464	660	500	160	14	14	230	8,5
MN 802	180 M4	1650	1365	1055	585	560	250	1000	800	560	228	425	930	870	870	340	30	455	60	540	30	940	17	568	629	668	16	11,5	630	450	698	513	730	550	160	14	14	307	17
MN 801	180 L4	1650	1365	1055	585	560	250	1000	800	560	228	425	930	870	870	340	30	455	60	540	30	940	17	568	629	668	16	11,5	630	450	698	513	730	550	160	14	14	320	17
MN 902	180 L4	1770	1510	1180	630	630	280	1080	900	630	253	470	1030	970	970	370	35	506	60	601	30	1036	19	638	698	738	16	11,5	710	500	775	567	810	600	160	16	14	381	35
MN 901	200 L4	1770	1510	1180	630	630	260	1060	900	630	253	500	1030	970	970	385	40	506	60	611	30	1066	19	638	698	738	16	11,5	710	500	775	567	810	600	160	16	14	395	35
MN 1002	225 S4	1980	1700	1315	710	710	315	1160	1000	710	284	550	1130	1060	1060	425	40	568	60	683	30	1178	21	718	775	818	16	11,5	800	560	871	639	920	680	200	14	14	550	53
MN 1001	225 M4	1980	1700	1315	710	710	315	1160	1000	710	284	550	1130	1060	1060	425	40	568	60	683	30	1178	21	718	775	818	16	11,5	800	560	871	639	920	680	200	14	14	580	55
MN 1122	280 S4	2250	1900	1550	800	800	354	1320	1120	800	320	690	1270	1200	1200	550	45	638	70	768	35	1398	21	808	861	908	16	14	900	630	968	706	1020	750	200	18	14	750	85
MN 1121	280 M4	2250	1900	1550	800	800	354	1320	1120	800	320	690	1270	1200	1200	550	45	638	70	768	35	1398	21	808	861	908	16	14	900	630	968	706	1020	750	200	18	14	790	90

The above date are unbinding

Fan weight in kg (without motor)

GOT
www.gotrading.co.th
Oriental Trading

MN_MO-MP-MR_Catalog.indd 14 04/03/2015 3:32:01 PM

SERIES MO OVERALL DIMENSIONS AND WEIGHTS

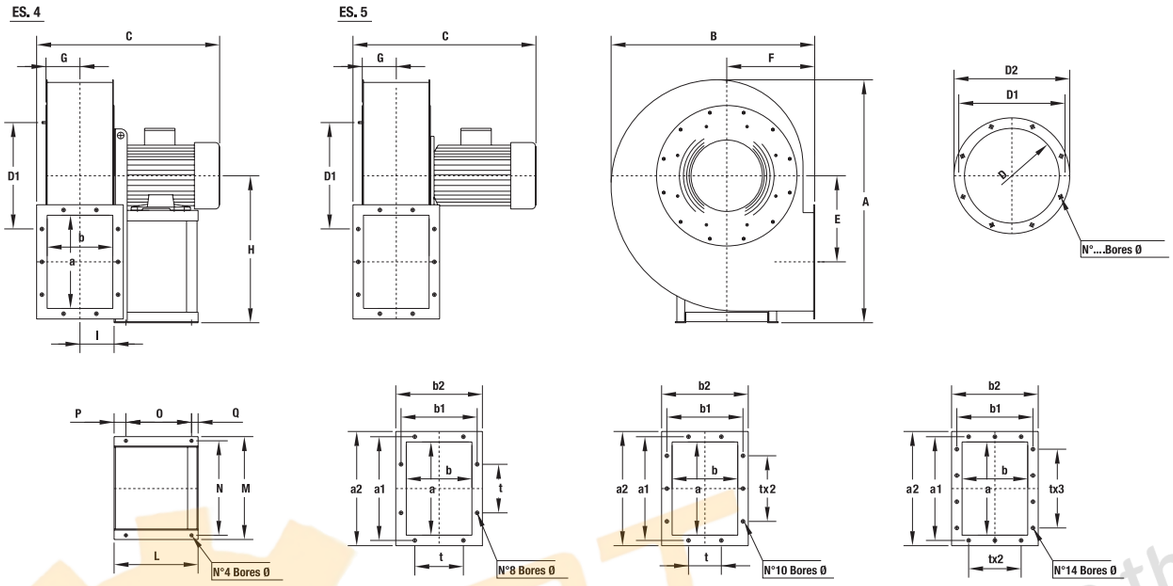

Table of discharge positions

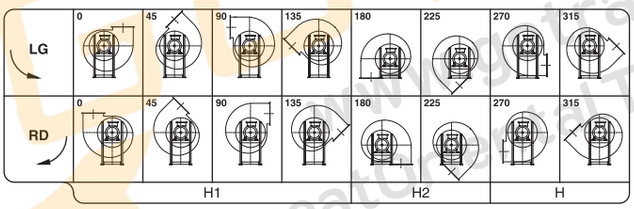

MO 311 – 631

The fan is revolvable

N.B.: For constructive reasons, the fans from size 451–501 follow an orientation with angles of 30° instead of 45°.

Type		Fan									Base								Inlet flange					Outlet flange									Weight	PD^2 GD^2
Fan	Motor	A	B	C	E	F	G	H	H_1	H_2	I	L	M	N	O	P	Q	ø	D	D_1	D_2	N°	ø	a	b	a_1	b_1	a_2	b_2	t	N°	ø	Kg	Kg m^2
MO 311	80 B2	665	550	450	228	236	94	400	400	236	96	190	235	215	125	50	15	10	255	292	325	8	11,5	250	180	292	219	320	250	112	10	11,5	38	0,14
MO 351	90 L2	745	620	515	263	265	104	450	450	265	107	215	270	245	137	60	18	10	286	332	366	8	11,5	280	200	332	249	360	280	125	10	11,5	50	0,34
MO 401	112 M2	830	695	610	292	300	117	500	500	300	120	260	332	300	200	35	25	12	321	366	401	8	11,5	315	224	366	273	395	304	125	10	11,5	68	0,6
MO 451	132 SB2	930	780	700	328	335	130	560	560	335	132	320	392	360	250	45	25	12	361	405	440	8	11,5	355	250	405	300	435	330	125	10	11,5	97	1,0
MO 501	160 MA2	1040	850	865	365	355	145	630	630	355	148	425	440	400	340	55	30	14	406	448	485	12	11,5	400	280	448	332	480	360	125	14	11,5	149	1,7
MO 562	160 MB2	1170	955	900	410	400	163	710	560	400	165	425	440	400	340	55	30	14	456	497	535	12	11,5	450	315	497	366	530	395	125	14	11,5	193	2,8
MO 561	160 L2	1170	955	900	410	400	163	710	560	400	165	425	440	400	340	55	30	14	456	497	535	12	11,5	450	315	497	366	530	395	125	14	11,5	195	3,4
MO 631/B	132 SA4	1315	1090	815	465	450	185	800	630	450	180	320	392	360	250	45	25	12	506	551	586	12	11,5	500	355	551	405	580	435	125	14	11,5	202	5,5

The above date are unbinding

Fan weight in kg (without motor)

www.greatrading.co.th
GreatOriental Trading

MN_MO-MP-MR_Catalog.indd 15 04/03/2015 3:32:02 PM

SERIES MO OVERALL DIMENSIONS AND WEIGHTS

ES. 4

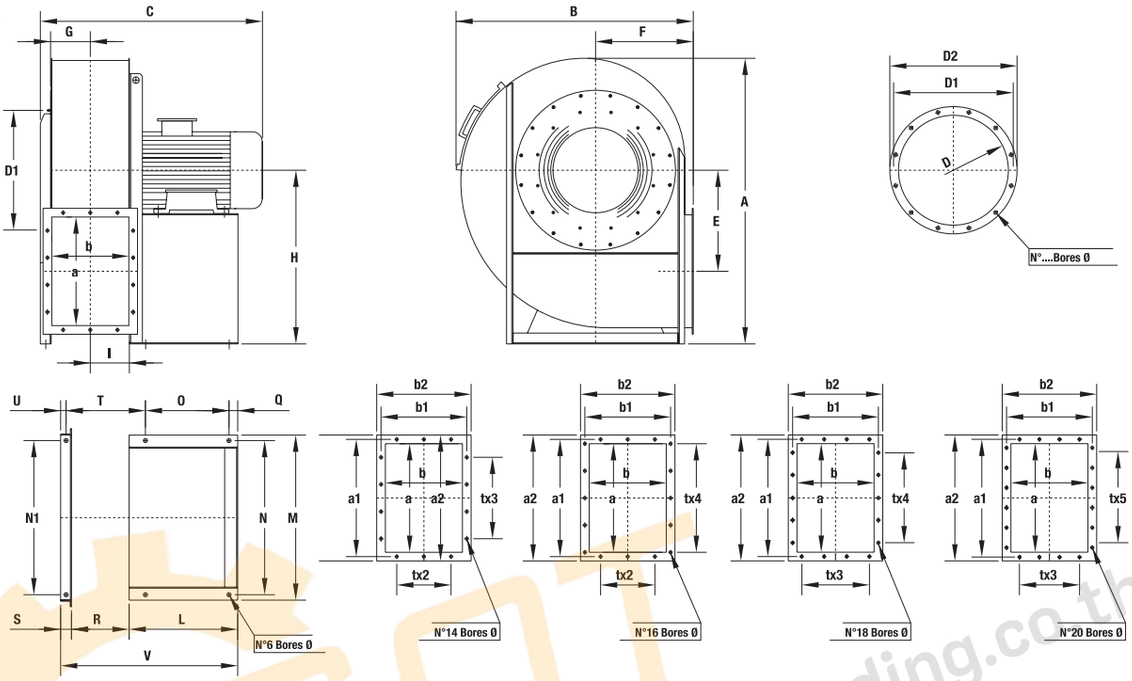

Table of discharge positions

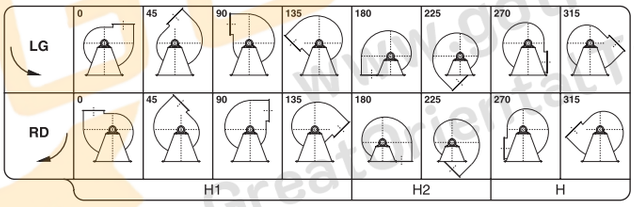

MO 632 – 1401

The fan is not revolvable

*MO 1401 - RD/LG 90-135 H1 = 1120 *MO 1401 - RD/LG 315 H = 1500

Type		Fan									Base													Inlet flange					Outlet flange									Weight	PD² GD²
Fan	Motor	A	B	C	E	F	G	$\mathring{H}$	$\mathring{H}_1$	H_2	I	L	M	N	N_1	O	Q	R	S	T	U	V	ø	D	D_1	D_2	N°	ø	a	b	a_1	b_1	a_2	b_2	t	N°	ø	Kg	Kg m²
MO 632	200 LR2	1320	1090	1025	465	450	185	800	630	450	186	500	570	510	710	385	40	366	50	466	25	916	16	506	551	586	12	11,5	500	355	551	405	580	435	125	14	11,5	192	5,1
MO 631/A	200 L2	1320	1090	1025	465	450	185	800	630	450	186	500	570	510	710	385	40	366	50	466	25	916	16	506	551	586	12	11,5	500	355	551	405	580	435	125	14	11,5	198	5,5
MO 712	132 MA4	1485	1230	860	525	500	210	900	710	500	207	320	392	360	800	250	25	410	50	480	25	780	12	568	629	668	16	11,5	560	400	629	464	660	500	160	14	14	233	8,1
MO 802	160 M4	1650	1365	1055	585	560	236	1000	800	560	230	425	930	870	870	340	30	455	60	540	30	940	17	638	698	738	16	11,5	630	450	698	513	730	550	160	14	14	298	13
MO 801	160 L4	1650	1365	1055	585	560	236	1000	800	560	230	425	930	870	870	340	30	455	60	540	30	940	17	638	698	738	16	11,5	630	450	698	513	730	550	160	14	14	310	16
MO 902	180 L4	1775	1510	1180	630	630	260	1060	900	630	255	470	1030	970	970	370	35	506	60	601	30	1036	19	718	775	818	16	11,5	710	500	775	567	810	600	160	16	14	380	30
MO 901	200 L4	1775	1510	1180	630	630	260	1060	900	630	255	500	1030	970	970	385	40	506	60	611	30	1066	19	718	775	818	16	11,5	710	500	775	567	810	600	160	16	14	410	34
MO 1002	225 S4	1980	1700	1315	710	710	290	1180	1000	710	285	550	1130	1060	1060	425	40	568	60	683	30	1178	21	808	861	908	16	11,5	800	560	871	639	920	680	200	14	14	560	48
MO 1001	225 M4	1980	1700	1350	710	710	290	1180	1000	710	285	550	1130	1060	1060	425	40	568	60	683	30	1178	21	808	861	908	16	11,5	800	560	871	639	920	680	200	14	14	570	50
MO 1122	250 M4	2250	1900	1400	800	800	322	1320	1120	800	320	600	1270	1200	1200	480	40	638	70	753	35	1308	21	908	958	1008	16	14	900	630	968	708	1020	750	200	18	14	690	70
MO 1121	280 S4	2250	1900	1540	800	800	322	1320	1120	800	320	690	1270	1200	1200	550	45	638	70	768	35	1398	21	908	958	1008	16	14	900	630	968	708	1020	750	200	18	14	750	75
MO 1252	315 S4	2510	2060	1630	900	830	365	1500	1250	830	360	800	1400	1320	1320	670	40	718	80	848	40	1598	24	1008	1067	1108	24	14	1000	710	1077	785	1120	830	200	18	14	870	100
MO 1251	315 M4	2510	2060	1770	900	830	365	1500	1250	830	360	800	1400	1320	1320	670	40	718	80	848	40	1598	24	1008	1067	1108	24	14	1000	710	1077	785	1120	830	200	18	14	910	120
MO 1401	315 S6	2800	2250	2025	1000	950	495	* 1650	* 1320	950	404	800	1580	1500	1500	670	40	808	80	938	40	1688	24	1128	1200	1248	24	14	1120	800	1210	881	1260	940	200	20	18	1100	210

The above date are unbinding

Fan weight in kg (without motor)

www.eotrading.co.th
Great Oriental Trading

MN_MO-MP-MR_Catalog.indd 16 04/03/2015 3:32:02 PM

SERIES MR OVERALL DIMENSIONS AND WEIGHTS

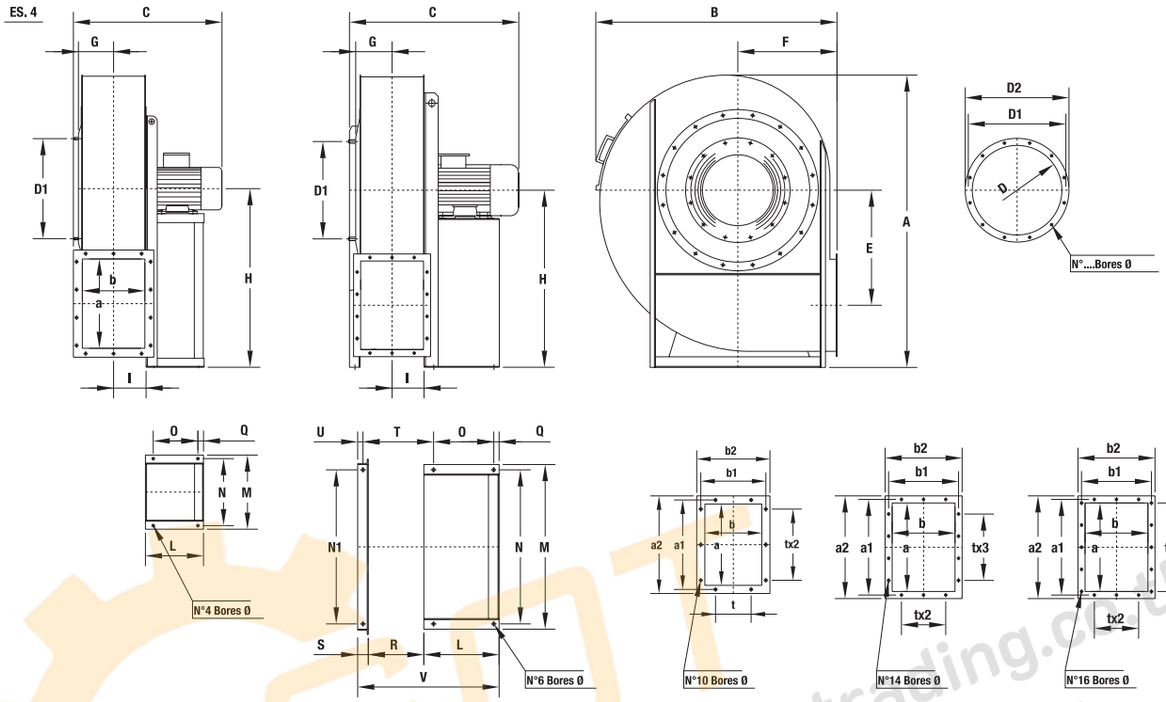

Table of discharge positions

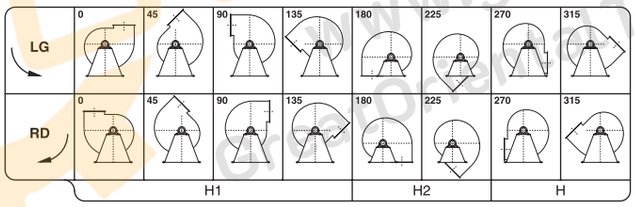

MR 401 – 711

The fan is revolvable

N.B.: For constructive reasons, the fans from size 451–501 follow an orientation with angles of 30° instead of 45°.

Type		Fan									Base												Inlet flange					Outlet flange									Weight	PD^2 GD^2
Fan	Motor	A	B	C	E	F	G	$\mathring{H}$	$\mathring{H}_1$	H_2	I	L	M	N	N_1	O	Q	R	S	T	U	V	ø	D	D_1	D_2	N°	ø	a	b	a_1	b_1	a_2	b_2	t	N°	ø	Kg	Kg m^2
MR 401	110 LA2	830	700	560	325	300	104	500	500	300	95	260	332	300	-	200	25	-	-	-	-	-	12	255	292	325	8	11,5	250	180	292	219	320	250	112	10	11,5	55	0,7
MR 451	132 SA2	930	780	650	365	335	116	560	560	335	105	320	392	360	-	250	25	-	-	-	-	-	12	286	332	366	8	11,5	280	200	332	249	360	280	125	10	11,5	65	1
MR 501	160 M2	1040	850	810	408	355	132	630	630	355	118	425	440	400	-	340	30	-	-	-	-	-	14	321	366	401	8	11,5	315	224	366	273	395	304	125	10	11,5	82	2
MR 561	160 M2	1160	950	835	458	400	136	710	560	400	132	425	440	400	-	340	30	-	-	-	-	-	14	360	405	440	8	11,5	355	250	405	300	435	330	125	10	11,5	105	3,1
MR 632	180 M2	1310	1085	885	515	450	160	800	630	450	146	470	500	450	710	370	35	295	49	385	24	814	14	406	448	486	12	11,5	400	280	448	332	480	360	125	14	11,5	145	5,5
MR 631/A	200 L2	1310	1085	960	515	450	160	800	630	450	146	500	570	510	710	385	40	295	49	395	24	844	16	406	448	486	12	11,5	400	280	448	332	480	360	125	14	11,5	155	5,5
MR 631/B	112 M4	1310	1085	670	515	450	160	800	630	450	146	260	332	300	-	200	25	-	-	-	-	-	12	406	448	486	12	11,5	400	280	448	332	480	360	125	14	11,5	120	5,4
MR 711	132 SA4	1480	1220	775	580	500	180	900	710	500	165	320	392	360	800	250	25	325	50	395	25	695	12	456	497	536	12	11,5	450	315	497	366	530	395	125	14	11,5	268	10,5

The above date are unbinding

Fan weight in kg (without motor)

www.gotrading.ch
Good Order Trading

SERIES MR OVERALL DIMENSIONS AND WEIGHTS

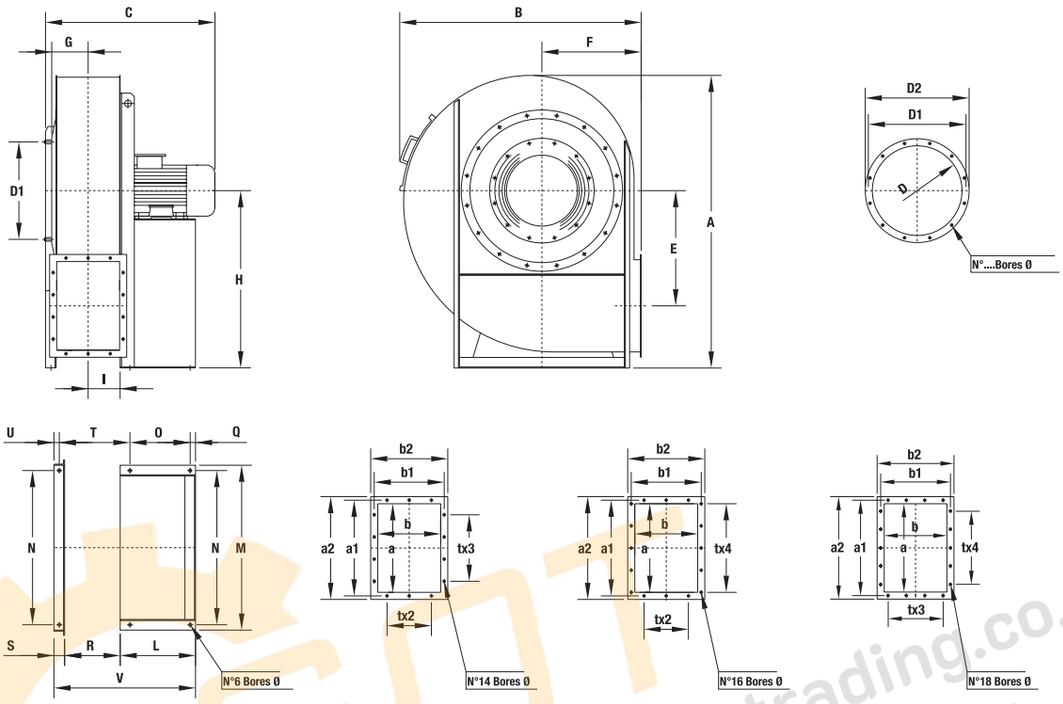

Table of discharge positions

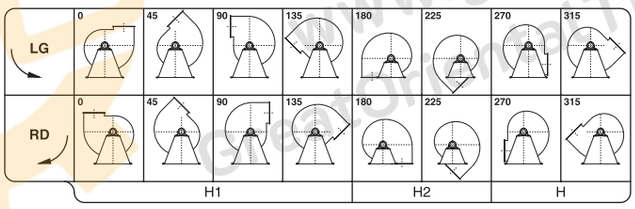

MR 802 – 1401

The fan is not revolvable

*MP 1401 - LG/RD 90 - LG/RD 135 H1 = 1120 LG/RD 315 H = 1500

Type		Fan									Base												Inlet flange					Outlet flange									Weight	PD^2 GD^2
Fan	Motor	A	B	C	E	F	G	$\hat{H}$	$\hat{H}_1$	H_2	I	L	M	N	O	Q	R	S	T	U	V	ø	D	D_1	D_2	N°	ø	a	b	a_1	b_1	a_2	b_2	t	N°	ø	Kg	Kg m^2
MR 802	132 MA4	1650	1360	825	650	560	206	1000	800	560	180	320	930	870	250	25	360	60	435	30	740	17	506	551	586	12	11,5	500	355	551	405	580	435	125	14	11,5	303	17
MR 801	160 M4	1650	1360	960	650	560	206	1000	800	560	180	425	930	870	340	30	360	60	445	30	845	17	506	551	586	12	11,5	500	355	551	405	580	435	125	14	11,5	313	18
MR 902	160 L4	1775	1510	1000	705	630	225	1060	900	630	203	425	1030	970	340	30	406	60	491	30	891	19	568	629	668	16	11,5	560	400	629	464	660	500	160	14	14	380	30
MR 901	180 L4	1775	1510	1070	705	630	225	1060	900	630	203	470	1030	970	370	35	406	60	501	30	936	19	568	629	668	16	11,5	560	400	629	464	660	500	160	14	14	397	33
MR 1002	200 L4	1980	1700	1145	795	710	254	1180	1000	710	228	500	1130	1060	385	40	458	60	563	30	1018	21	638	698	738	16	11,5	630	450	698	513	730	550	160	14	14	562	46
MR 1001	225 S4	1980	1700	1220	795	710	254	1180	1000	710	228	550	1130	1060	425	40	458	60	563	30	1068	21	638	698	738	16	11,5	630	450	698	513	730	550	160	14	14	585	51
MR 1122	225 M4	2220	1915	1280	895	800	284	1320	1120	800	254	550	1270	1200	425	40	508	80	633	40	1138	24	718	775	818	16	11,5	710	500	775	567	810	600	160	16	14	815	65
MR 1121	250 M4	2220	1915	1280	895	800	284	1320	1120	800	254	600	1270	1200	460	45	508	80	643	40	1188	24	718	775	818	16	11,5	710	500	775	567	810	600	160	16	14	856	70
MR 1252	280 S4	2510	2000	1480	1000	830	320	1500	1250	830	284	690	1400	1320	550	45	568	80	703	40	1388	24	808	861	908	16	14	800	560	871	639	920	680	200	14	14	985	100
MR 1251	315 S4	2510	2000	1500	1000	830	320	1500	1250	830	284	800	1400	1320	670	40	568	80	698	40	1448	24	808	861	908	16	14	800	560	871	639	920	680	200	14	14	1050	120
MR 1401	315 M4	2780	2270	1850	1110	950	400	*1650	*1320	950	320	800	1580	1500	670	40	638	80	768	40	1518	24	908	958	1008	16	14	900	630	968	708	1020	750	200	18	14	1250	230

The above date are unbinding

Fan weight in kg (without motor)

GOT www.gotrading.co.th Good Operational Trading

SERIES MP OVERALL DIMENSIONS AND WEIGHTS

2 Poles

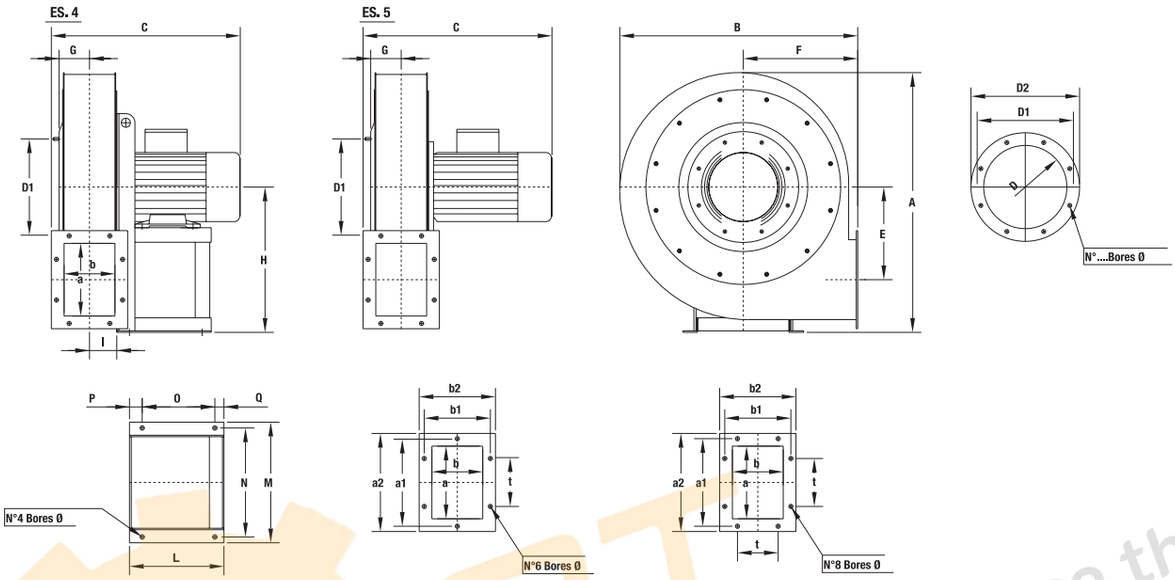

Table of discharge positions

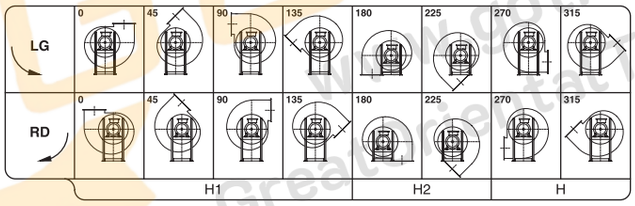

The fan is revolvable

N.B.: For constructive reasons, the fans from size 451÷501 follow an orientation with angles of 30° instead of 45°.

Type		Fan									Base								Inlet flange					Outlet flange									Weight	PD^2 GD^2
Fan	Motor	A	B	C	E	F	G	H	H_1	H_2	I	L	M	N	O	P	Q	ø	D	D_1	D_2	N°	ø	a	b	a_1	b_1	a_2	b_2	t	N°	ø	Kg	Kg m^2
MP 352	80 A2	590	530	385	200	250	70	335	335	250	60	190	235	215	125	50	15	10	185	219	255	8	11,5	160	112	200	153	230	182	112	6	11,5	23	0,25
MP 351	80 B2	590	530	385	200	250	70	335	335	250	60	190	235	215	125	50	15	10	185	219	255	8	11,5	160	112	200	153	230	182	112	6	11,5	24	0,28
MP 402	90 S2	660	590	435	235	280	75	375	375	280	68	215	270	245	137	60	18	10	205	241	275	8	11,5	180	125	219	167	250	195	112	6	11,5	26	0,45
MP 401	90 L2	660	590	435	235	280	75	375	375	280	68	215	270	245	137	60	18	10	205	241	275	8	11,5	180	125	219	167	250	195	112	6	11,5	27	0,5
MP 452	100 LA2	715	655	520	255	315	85	400	400	315	75	260	332	300	200	35	25	12	229	265	299	8	11,5	200	140	241	182	270	210	112	8	11,5	48	0,8
MP 451	112 M2	715	665	520	255	315	85	400	400	315	75	260	332	300	200	35	25	12	229	265	299	8	11,5	200	140	241	182	270	210	112	8	11,5	49	1,0
MP 502	132 SA2	800	740	615	290	355	100	450	450	355	85	320	392	360	250	45	25	12	255	292	325	8	11,5	224	160	265	200	294	230	112	8	11,5	61	2,0
MP 501	132 SB2	800	740	615	290	355	100	450	450	355	85	320	392	360	250	45	25	12	255	292	325	8	11,5	224	160	265	200	294	230	112	8	11,5	62	2,0
MP 561	160 M2	900	820	740	338	380	101	500	500	380	86	425	440	400	340	55	30	14	286	332	366	8	11,5	224	160	265	200	294	230	112	8	11,5	85	3,5

The above date are unbinding

Fan weight in kg (without motor)

www.gotrading.co.th
Great Oriental Trading

MN_MO-MP-MR_Catalog.indd 19 04/03/2015 3:32:04 PM

Accessories

Circular flow regulators

OVERALL DIMENSIONS in mm

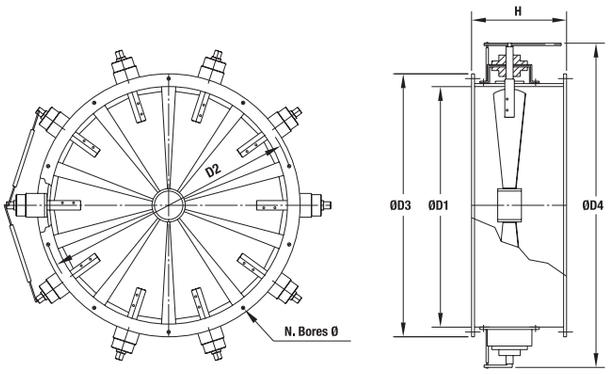

Type	D_1	D_2	D_3	D_4	H	n°	Bores Ø	Weight kg
280	280	332	366	450	280	8	11,5	24
315	321	366	400	570	280			30
355	361	405	440	610	280			33
400*	406	448	485	650	315	12		36
450	456	497	535	700	315			40
500	506	551	585	820	355			53
560	568	629	666	880	355	16		60
630	638	698	736	990	355			68
710	718	775	816	1070	355			75
800	808	861	906	1160	400		14	85
900	908	958	1006	1260	400			100
1000	1008	1067	1107	1360	400	24		130
1120	1130	1200	1248	1480	450			160
1250	1260	1337	1380	1610	450			180
1400	1420	1491	1540	1760	450		16	210
1600	1610	1663	1730	1960	500			230
1800	1810	1880	1950	2200	500	32	18	280
2000	2010	2073	2130	2380	500			340

Rectangular flow regulators, outflow end

OVERALL DIMENSIONS in mm

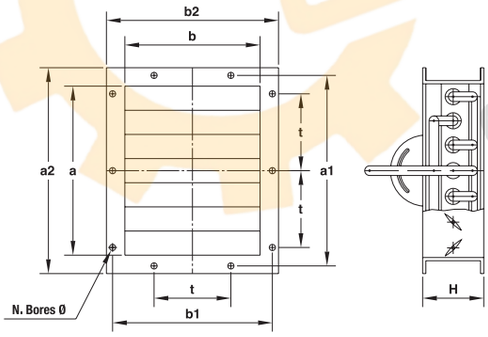

Type	a	b	a_1	b_1	a_2	b_2	H	t	n°	Bores Ø	Weight kg
90 x 63	90	63	112	90	150	123	130	-	4	9	2,2
100 x 71	100	71	125	100	160	131	130	-			2,5
112 x 80	112	80	140	112	172	140	130				2,7
125 x 90	125	90	165	130	185	150	130	112	6	11,5	3
140 x 100	140	100	182	141	210	170	130				3,3
160 x 112	160	112	200	153	230	182	130				3,8
180 x 125	180	125	219	167	250	195	130				4,5
200 x 140	200	140	241	182	270	210	130		8		5,3
224 x 160	224	160	265	200	294	230	130				6,5
250 x 180	250	180	292	219	320	250	130		10		7,5
280 x 200	280	200	332	249	360	280	130	125			8,5
315 x 224	315	224	366	273	395	304	130				9,6
355 x 250	355	250	405	300	435	330	130				11
400 x 280	400	280	448	332	484	368	130				13
450 x 315	450	315	497	366	533	402	130				18
500 x 355	500	355	551	405	587	441	150		14		21
560 x 400	560	400	629	464	669	504	150	160		14	26
630 x 450	630	450	698	513	738	553	180				30
710 x 500	710	500	775	567	815	607	180		16		34
800 x 560	800	560	871	639	921	689	200	200	14		42
900 x 630	900	630	968	708	1018	758	200		18		48
1000 x 710	1000	710	1077	785	1127	835	200				65
1120 x 800	1120	800	1210	881	1270	941	220		20	18	80
1250 x 900	1250	900	1347	978	1407	1038	220		24		95
1400 x 1000	1400	1000	1501	1087	1560	1160	250				110
1600 x 1120	1600	1120	1683	1220	1760	1280	250		28	22	150
1800 x 1250	1800	1250	1876	1357	1960	1410	280		32		200
2000 x 1400	2000	1400	2093	1511	2180	1580	280		34		280

External **flow regulator** designed for dusty air, sturdy construction, for industrial use.
Layout 1 = max. temperature 120°C.
Layout 2 = from 120 to 350°C. + pression ≥ 700 mm H_2O.

www.gotrading.co.th
GreenOne Trading

Accessories

Louver flow regulators

OVERALL DIMENSIONS in mm

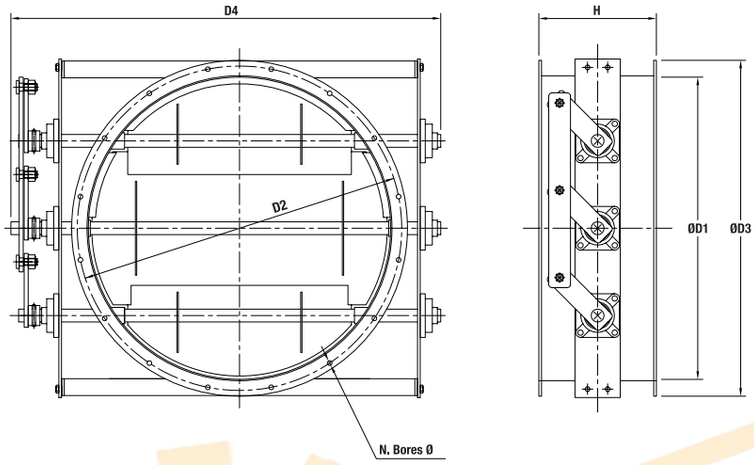

Type	D_1	D_2	D_3	D_4	H	Weight kg
315	315	366	400	640	280	21
355	355	405	440	680	280	23
400*	400	448	485	720	315	29
450	450	497	535	770	315	32
500	500	551	585	820	355	60
560	560	629	666	900	355	75
630	630	698	736	1040	355	80
710	710	775	816	1130	355	86
800	800	861	906	1220	400	93
900	900	958	1006	1320	400	110
1000	1000	1067	1107	1420	400	126
1120	1120	1200	1248	1560	450	160
1250	1250	1337	1380	1690	450	192
1400	1400	1491	1540	1860	450	260
1600	1600	1663	1730	2050	500	320

Butterfly flow regulators

OVERALL DIMENSIONS in mm

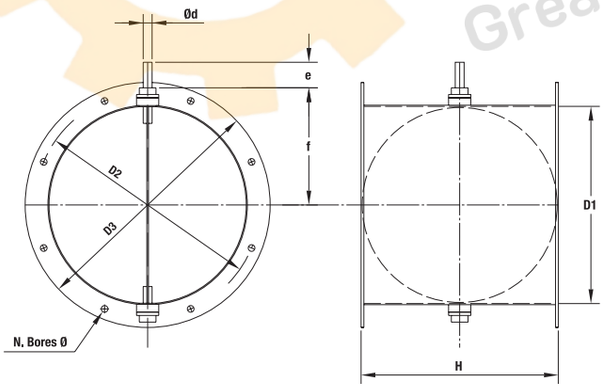

Type	D_1	D_2	D_3	d	e	f	H	n°...Bores Ø	Weight kg
140	140	182	215	14	30	110	140	8 - 11,5	2,8
160	160	200	235	14	30	120	160	8 - 11,5	3,2
180	180	219	255	14	30	130	180	8 - 11,5	4
200	200	241	275	16	30	140	200	8 - 11,5	4,8
224	224	265	299	16	30	150	224	8 - 11,5	5,5
250	250	292	325	16	45	165	250	8 - 11,5	6,5
280	280	332	366	16	45	180	280	8 - 11,5	8,5
315	315	366	401	16	45	195	315	8 - 11,5	10,5
355	355	405	441	16	45	215	355	8 - 11,5	13,5
400 *	400	448	486	16	45	240	400	12 - 11,5	18
450	450	497	535	20	60	280	450	12 - 11,5	23
500	500	551	585	20	60	305	500	12 - 11,5	29
560	560	629	666	20	60	335	560	16 - 11,5	36
630	630	698	736	20	60	370	630	16 - 13	47
710	710	775	816	20	60	410	710	16 - 13	61
800	800	861	906	30	70	455	800	16 - 13	80
900	900	958	1006	30	70	505	900	16 - 13	100
1000	1000	1067	1107	30	70	555	1000	24 - 14	155
1120	1120	1200	1248	30	70	615	1120	24 - 14	190

GOT www.gotrading.co.th GreatOrientalTrading

Accesssories

Vibration-damping couplings outflow-end

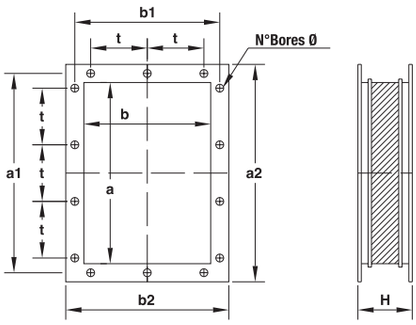

Series	mm								Bores		Weight
	a	b	a_1	b_1	a_2	b_2	t	H	n°	Ø	kg
90 x 63	90	63	112	90	150	123	-	140	4	11	1
100 x 71	100	71	125	100	160	131	-	140	4	11	1,1
112 x 80	112	80	140	112	172	140	-	140	4	11	1,3
125 x 90	125	90	165	130	185	150	100	140	6	11	1,6
140 x 100	140	100	182	141	210	170	112	140	6	12	2,1
160 x 112	160	112	200	153	230	182	112	140	6	12	2,6
180 x 125	180	125	219	167	250	195	112	140	6	12	3,2
200 x 140	200	140	241	182	270	210	112	140	8	12	3,9
224 x 160	224	160	265	200	294	230	112	140	8	12	4,6
250 x 180	250	180	292	219	320	250	112	140	10	12	5,5
280 x 200	280	200	332	249	360	280	125	140	10	12	7
315 x 224	315	224	366	273	395	304	125	140	10	12	8,2
355 x 250	355	250	405	300	435	330	125	140	10	12	10
400 x 280	400	280	448	332	480	360	125	140	14	12	11,2
450 x 315	450	315	497	366	530	395	125	140	14	12	13
500 x 355	500	355	551	405	580	435	125	160	14	11,5	14,5
560 x 400	560	400	629	464	660	500	160	160	14	14	18
630 x 450	630	450	698	513	730	550	160	160	14	14	19,5
710 x 500	710	500	775	567	810	600	160	160	16	14	22
800 x 560	800	560	871	639	930	690	200	160	14	14	31
900 x 630	900	630	968	708	1030	760	200	160	18	14	37
1000 x 710	1000	710	1077	785	1130	830	200	200	18	14	45
1120 x 800	1120	800	1210	881	1270	940	200	200	20	18	56
1250 x 900	1250	900	1347	978	1400	1040	200	200	24	18	65
1400 x 1000	1400	1000	1501	1087	1550	1160	200	200	24	18	80
1600 x 1120	1600	1120	1683	1220	1760	1280	200	200	28	22	100
1800 x 1250	1800	1250	1876	1357	1960	1410	200	200	32	22	130
2000 x 1400	2000	1400	2093	1511	2180	1580	200	200	34	22	165

Vibration-damping couplings intake-end

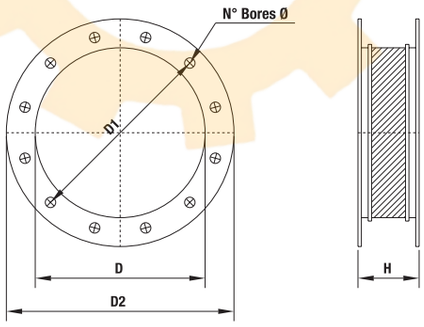

Series	mm				Bores		Weight
	D	D_1	D_2	H	n°	Ø	kg
140	140	182	215	140	8	11,5	3
160	160	200	235	140	8	11,5	3,2
180	180	219	255	140	8	11,5	3,5
200	200	241	275	140	8	11,5	3,8
224	224	265	299	140	8	11,5	4,2
250	250	292	325	140	8	11,5	5
280	280	332	366	140	8	11,5	6,8
315	315	366	401	140	8	11,5	7,5
355	355	405	440	140	8	11,5	9
400 *	400	448	485	140	12	11,5	10
450	450	497	535	140	12	11,5	11,5
500	500	551	585	160	12	11,5	13
560	560	629	666	160	16	11,5	16
630	630	698	736	160	16	13	17,5
710	710	775	816	160	16	13	20
800	800	861	906	160	16	13	22
900	900	958	1006	160	16	13	25
1000	1000	1067	1107	200	24	14	28
1120	1120	1200	1248	200	24	14	42
1250	1250	1337	1380	200	24	14	46
1400	1400	1491	1540	200	24	16	52
1600	1600	1663	1730	200	24	16	62
1800	1810	1880	1950	200	32	18	85
2000	2010	2073	2130	200	32	18	110

Coupling 1 : PVC hoop-iron max temperature 80° C; from 80° to 350° C fiber glass strap aluminium - **Coupling 2 :** Like type 1 plus anti-wear protection.

www.gotrading.co.th
GreatOrientalTrading

Accessories

Protection Net

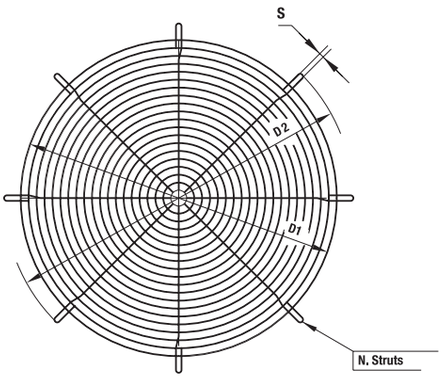

Dn	(mm)	(mm)	(mm)	N° Struts
125	140	220	12	4
140				
160				
180	212	285	12	4
200				
224				
250	312	385	12	4
280				
315				
355	357	430	12	4
400	408	470	12	4
450	450	528	12	4
500	500	580	16	4
560	562	650	16	4
630	620	720	16	8
710	710	800	16	8
800	795	895	16	8
900	890	990	16	8
1000	990	1130	18	8
1120	1115	1250	18	8
1250	1245	1400	20	8
1400	1405	1560	20	8
1600	1595	1750	20	8
1800	1795	1950	20	8
2000	1995	2150	20	8

ISOLATOR

TYPE A

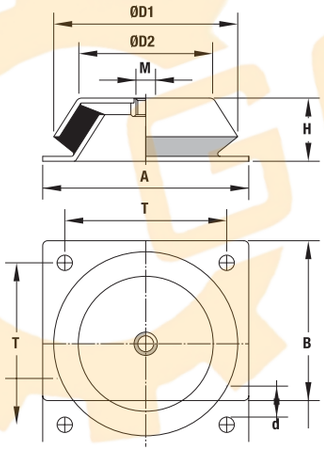

Type	A	B	H	M	T	d	D1	D2
MOD 58540	108	108	40	12	88	9	101	75
MOD 33629	168	168	50	16	132	13	136	125
MOD 58541	200	200	70	20	165	13	192	170

TYPE B

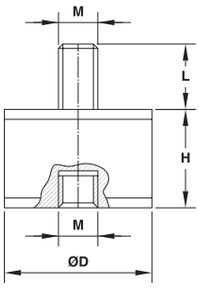

Type	D	H	M	L
B_D3020	30	20	8	20
B_D3030	30	30	8	20
B_D4030	40	30	8	23
B_D4040	40	40	8	23
B_D5020	50	20	10	28
B_D5030	50	30	10	28
B_D5045	50	45	10	28
B_D7045	70	45	10	30
B_D7540	75	40	12	37
B_D7555	75	55	12	37
B_D10040	100	40	16	45
B_D10055	100	55	16	45
B_D10075	100	75	16	45

(Quote = mm)

www.gotrading.co.th
GreatOrientalTrading

MN_MO-MP-MR_Catalog.indd 23 04/03/2015 3:32:05 PM

SECTION

Esec. 4

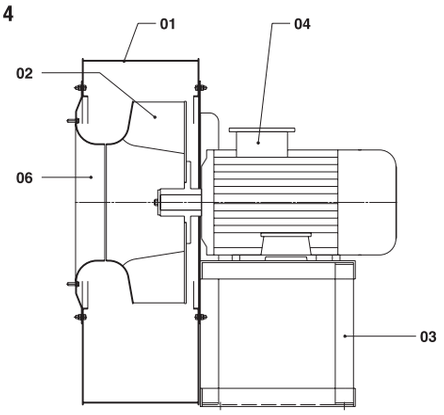

Esec. 4 (with fan)

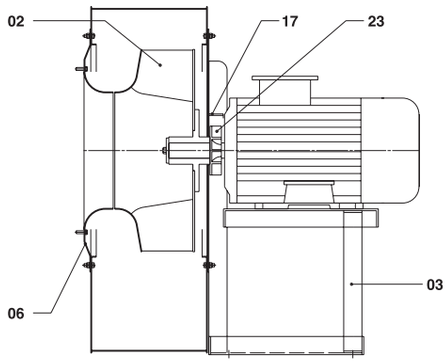

Esec. 5

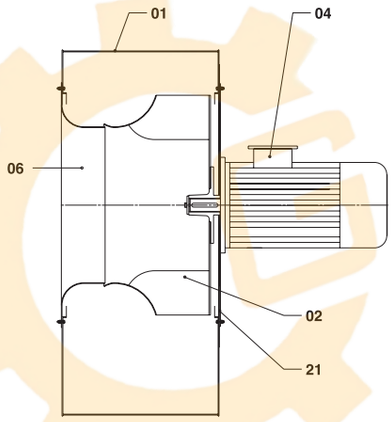

Esec. 1
(with accessories)

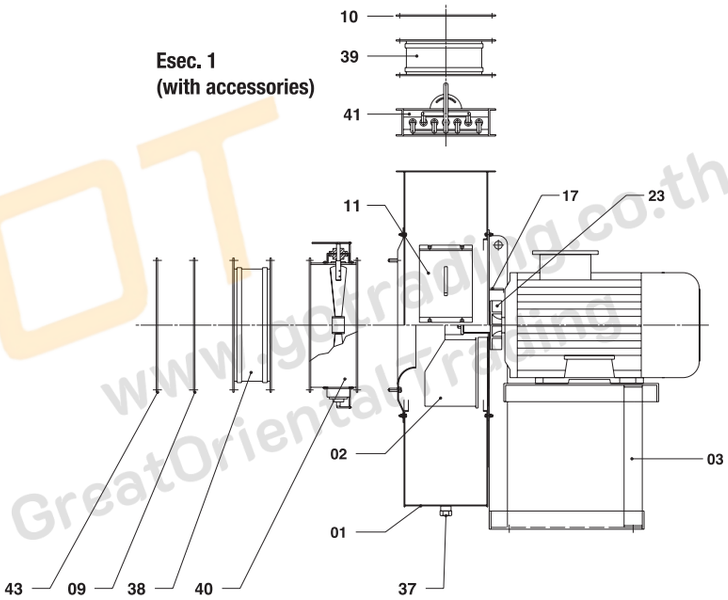

Esec. 4

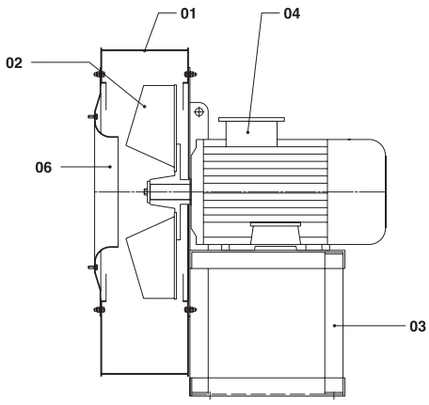

Esec. 4 (with fan)

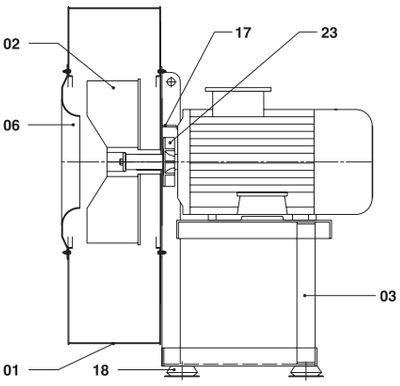

www.gotrading.co.th
GreatOrientalTrading

MN_MO-MP-MR_Catalog.indd 24
04/03/2015 3:32:05 PM

SECTION

Esec. 1

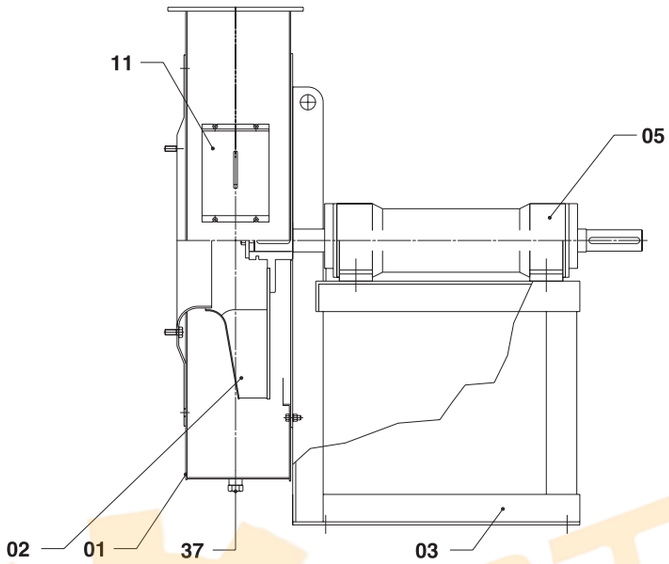

SPARE PARTS

01 - CASE
02 - IMPELLER
03 - BASE
04 - MOTOR
05 - SUPPORT
06 - NOZZLE
07 - TURNING BASE
* 09 - SUCKING COUNTERFLANGE
* 10 - PRESSING COUNTERFLANGE
* 11 - INSPECTION DOOR
15 - BELT PROTECTION CASE
16 - CONNECTIME PIPE
17 - COOLING FAN PROTECTION
* 18 - SHOCK ISOLATING MOUNTINGS
19 - GREASE PROTECTION RING
22 - KEY
23 - COOLING FAN
24 - LUBRIFICATOR
25 - BEARING
26 - SHAFT
27 - CASE
28 - CAP
29 - PROTECTION RING
30 - COVER
31 - HOUSING
32 - FIXING COLLARS
33 - LOCKING COMPASS
34 - RING NUT
35 - SECURITY WASHER
36 - SEMI-ELASTIC JOINT
* 37 - DISCHARGE CAP
* 38 - SUCKING FLEXIBLE JOINT
* 39 - PRESSING FLEXIBLE JOINT
* 40 - CIRCULAR FLOW REGULATOR
* 41 - RECTANGULAR FLOW REGULATOR
* 43 - PROTECTION NET

Esec. 9

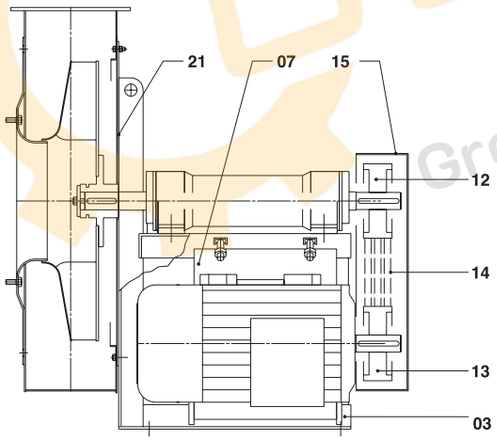

Esec. 12

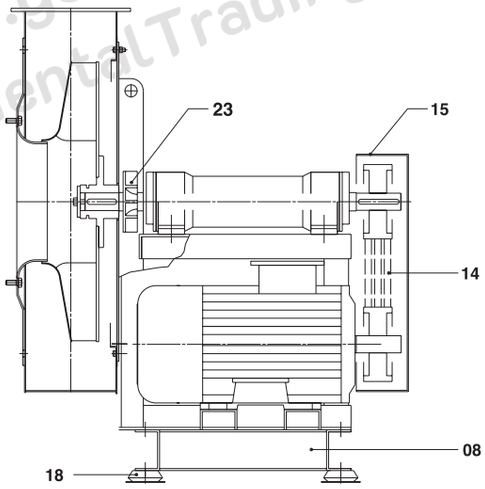

www.gotrading.co.th
GreatOrientalTrading

SECTION

Monoblock housing

Frame size

35 A/B 28 – 60 A/B 55

50 A/B R 48 – 60 A/B R 55
50 AL R 48 – 60 AL R 55

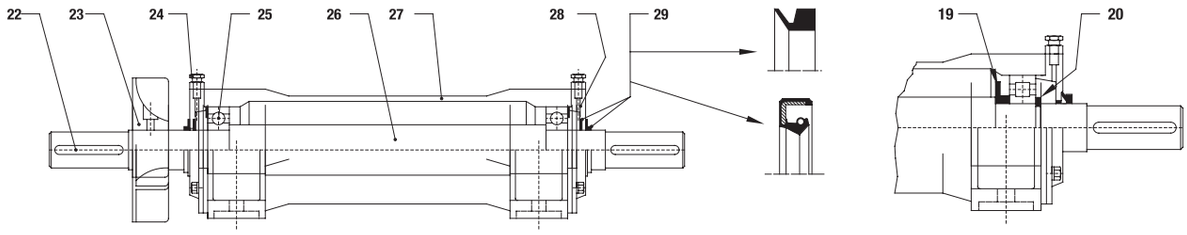

Frame size

SNL 515 – SNL 524

35 AL 28 – 60 AL 55

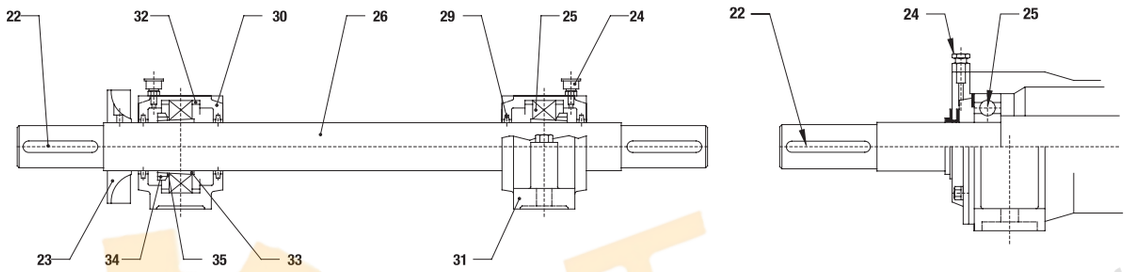

SPARE PARTS

01 - CASE
02 - IMPELLER
03 - BASE
04 - MOTOR
05 - SUPPORT
06 - NOZZLE
07 - TURNING BASE
08 - BEDPLATE
09 - SUCKING COUNTERFLANGE
10 - PRESSING COUNTERFLANGE
11 - INSPECTION DOOR
12 - FAN PULLEY
13 - MOTOR PULLEY
14 - FAN BELTS
15 - BELT PROTECTION CASE
17 - COOLING FAN PROTECTION
18 - SHOCK ISOLATING MOUNTINGS
19 - GREASE PROTECTION RING
20 - SEEGER RING
21 - BASE PLATE
22 - KEY
23 - COOLING FAN
24 - LUBRIFICATOR
25 - BEARING
26 - SHAFT
27 - SUPPORT HOUSING
28 - CAP
29 - PROTECTION RING
30 - COVER
31 - HOUSING
32 - FIXING COLLARS
33 - LOCKING COMPASS
34 - RING NUT
35 - SECURITY WASHER
37 - DISCHARGE CAP
38 - SUCKING FLEXIBLE JOINT
39 - PRESSING FLEXIBLE JOINT
40 - CIRCULAR FLOW REGULATOR
41 - RECTANGULAR FLOW REGULATOR
43 - PROTECTION NET

www.gotrading.co.th
GreatOrientalTrading

MN_MO-MP-MR_Catalog.indd 26
04/03/2015 3:32:06 PM

Inquiry for Eurovent Blower

Subject : _____ Data : _____
From : Job No.: _____
Company _____
Contact _____
Tel : _____
Fax : _____ E-mail : _____

Fan Specification

Technical Data Information		
Model	m^3/min	
Air volume	mm Wg	
Staic pressure	mm Wg	
Total pressure	°C	
Service Temperature	rpm	
Fan speed	KW	
Motor	%	
Efficiency		
Colour (Standard Green)		
Qty .	Set	

Construction	
Type	☐ Centifugal ☐ Axial ☐ Propeller ☐ recommended by vendor
Power Transmission	☐ Direct ☐ Belt ☐ recommended by vendor
Position (see table 1)	
Accessory	☐ Inlet Damper ☐ Outlet Damper ☐ Filter ☐ Expansion joint
	☐ Inspection Hole ☐ Drain with plug

Application
if replace for old blower please give original information.

** Do not use direct drive for hot air fan

This information above is for guideline only , fan supplier should re-check and select the proper solutions.

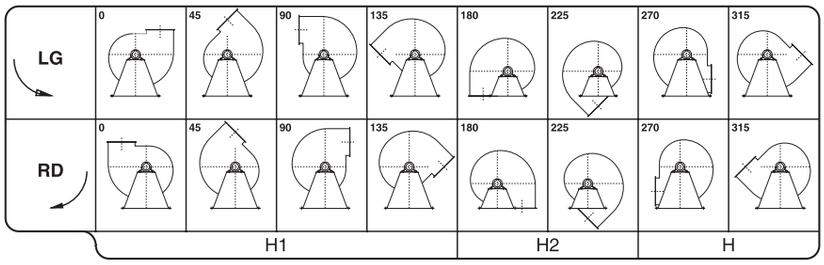

Table 1 Show position

Please send to

E-mail : info@euroventblower.com

Checked by	Approve by

www.gotrading.co.th
GreatOrientalTrading

EuroVent

www.gotrading.co.th
GreatOrientalTrading

บริษัท เกรทโอเรียนเต็ล เทรดดิ้ง จำกัด
เลขที่ 1049 ถนนร่วมธรรม
ตำบลคอหงส์ อำเภอหาดใหญ่
จังหวัดสงขลา 90110
074-300212-4

GOT
www.gotrading.co.th
GreaOrintalTrading
097-361-9703
GreatOrientalTrading
@gotrading