GOT
www.gotrading.co.th
GreaOrintalTrading

Centrifugal Fan

Series
MNb MOb

EuroVent

Symbols and measurement units used in the catalogue.

V m^3/min	= Delivery in m^3/min
V m^3/h	= Delivery in m^3/h
pt mmH_2O	= Total pressure in mm H_2O
pt Pa	= Total pressure in Pascal
pd mmH_2O	= Dynamic pressure in mm H_2O
pd Pa	= Dynamic pressure in Pascal
c2	= Speed in m/s on pressing throat
n	= Fan rounds
Lp	= Noise level indicated in dB/A
P	= Power absorbed in kW
η	= Fan output

Table of positions of discharge

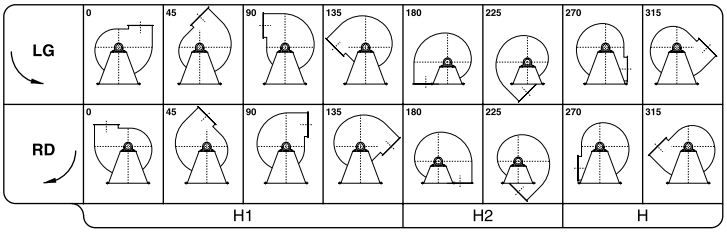

Fans constructive executions in conformity with rules UNI EN ISO 13349 (2009).

EXECUTION 1
For belt drive.Whee keyed overhung.Supports mounted on a base outside the air stream.
Max air temperature 90 °C without cooling fan; 350 °C when fitted with cooling fan.

ESEC. 1

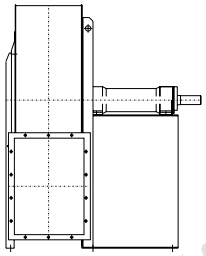

EXECUTION 9
For belt drive.Same as arrangement 1 with motor supported by the side wall of base.
Max air temperature: 90 °C without cooling fan; 350 °C when fitted with cooling fan.
Position of motor W or Z.

ESEC. 9

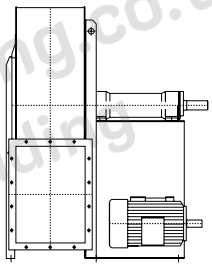

EXECUTION 12
For belt drive.Same as arrangement 1 with both fan and motor supported by the foundation frame. Max.air temperature: 90 °C without cooling fan; 350 °Cwhen fitted with cooling fan.
Position of motor W or Z (exceptionally X or Y).

ESEC. 12

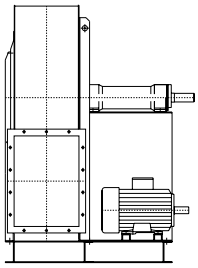

Plan for motor positioning belt drive.

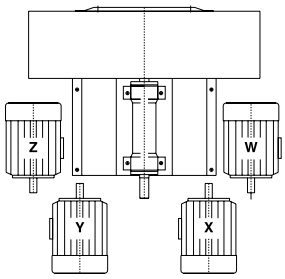

GOT
www.gotrading.co.th
GreatOrientalTrading

General concepts abouts centrifugal fans

The centrifugal fan essentially in a scroll in which a wheel rotates. The wheel's movement is caused by an external energy source, that is usually an electric motor. The main characteristics of a centrifugal fan are:

a) delivery c) efficiency
b) pressure d) rotation speed

DELIVERY

It is indicated by the value of the fluid intaken through the fan in the time unit;normally this is stated by the ratio m^3/sec., m^3/min., or m^3/h.

PRESSURE

It is usually indicated by the ratio kgf/m^2 or Pa. The pressure generated through a fan is named TOTAL (pt);it is the sum of two different pressures:STATIC + DYNAMIC.The static pressure (p.s.) is the potential energy that wins the circuit resistance when the fluid is passing through the circuit.The dynamic pressure (pd) is the kinetic energy of the moving fluid and it depends on the medium exit speed of the air from the fan throat; the formula is:

$$pd = \frac{C^2}{2g} \bullet 1.226 \qquad C = \frac{V}{A}$$

where:
V = delivery m^3/sec.
A = throat surface m^2
c = medium speed of the air m/sec.
g = acceleration of gravity (9,81 m/sec)
1,226 = air specific gravity kg/m^3at 15°C and 760 mm Hg.

ENERGY

It consists in the radio between the energy sypplied by the fan to the fluid and the energy used by the external source to put in operation the fan.
The formula is:

$$\eta = \frac{V \bullet pt}{6120 \bullet P}$$

where:
V = delivery m^3/min.
pt = total pressure kgf/m^2
P = used energy by the fan indicated in kW
η = fan efficiency

ROTATION SPEED

It is indicated by the number of roundes per minute:at this speed the wheel must rotate in order to get the required performances. N.B.The following tables show the characteristics of an operating device at air 15°C, barometric pressure 760 mm Hg, specific gravity 1,226 kg/m^3, test according to UNI ENISO 5801:2009 (UNI 10531:1995) rules.If customer wishes get different perfomances with intermediary value in respect of the value shown in the tables or if he prefers a device operating with air suction at different temperature in respect of 15°C and with different specific gravity in respect of 1,226 we suggest to follow these rules the characteristics of fans change according to the variation in speed rotation and considering the specific gravity of the fluid intaken.

a) Variation of rotation speed (n) with air specific gravity constant.
1. The delivery (V) varies directly with rotations ratio:

$$V_1 = V \bullet \frac{n^1}{n}$$

2. The pressure varies with square number of rotations ratio:

$$pt_1 = pt \bullet \left(\frac{n^1}{n}\right)^2$$

3. The energy (P) varies with cube of rotations ratio:

$$p_1 = P \bullet \left(\frac{n^1}{n}\right)^3$$

b) Variations of specific gravity (γ) of the air when rotation speed is constant.

1. The delivery (V) remains constant.
2. The pressure (pt) and the energy (P) vary directly with the ratio of specific gravities.

$$pt_1 = pt \bullet \frac{\gamma^1}{\gamma} \qquad P_1 = P \bullet \frac{\gamma^1}{\gamma}$$

The specific gravity of the air at different temperatures is obtained through the formula:

$$\gamma = \frac{1{,}293 \bullet 273}{(273+t)} \ (kg/m^3)$$

The air density depensing on a change of the atmospheric pressure is given by the following formula:

$$\gamma = \frac{Pb \bullet 13.59}{29.27 \bullet (273 + t)} \ (kg/m^3)$$

where:
γ = specific gravity at °C
1,293 = specific gravity of the air at 0°C
t = air temperature indicated in °C
273 = absolute zeto
Pb = atmospheric pressure mm Hg

This table shows directly the air specific gravity at different temperatures:

t°C	-20	-10	0	+10	+15	+20	+30	+40	+50	+60	+70	+80	+90	+100	+120	+140	+160	+180	+200	+220	+240	+260	+280	+300	+325	+350
γ	1,396	1,342	1,293	1,248	1,226	1,205	1,165	1,128	1,093	1,060	1,029	1,000	0,973	0,947	0,90	0,85	0,82	0,78	0,75	0,72	0,69	0,66	0,64	0,62	0,59	0,56

Atmospheric pressure depending on altitude above sea-level:

mt	0	500	1000	1500	2000	2500	3000	3500	4000	4500
Pb mm Hg	760	720	680	640	600	560	530	500	470	440

GOT www.gotrading.co.th GreatOrientalTrading

CHARACTERISTICS

The features listed in the diagrams are refered to air at the temperature of + 15°C and at the barometrical pressure of 760 mm. Hg with specific gravity 1,226 Kg/m³.

NOISE LEVEL

The noise level values indicated are expressed in decibel scale A (dB/A) they are understood measured in a free range at the distance of **1.5 m** from the fan operating with the highest output capacity, connected to inlet and outlet pipe connections (rules UNI EN ISO 3740-3744-3746-13347).

ORIENTATIONS

All the fans can be constructed with the delivery mouth in 16 different positions (8 in clockwise rotation RD and 8 in counterclockwise rotation LG) as indicated on the orientation tables. Please note that the direction of rotation is determined by looking at the fan from the transmission side. Some sizes of these fans are revolvable always considering the rotation direction. This information is indicated at the end of the various tables of the overall dimensions. Flange see DIN 24154-24158.

ACCESSORIES (delivery on request)

- **intaking and pressing counterflange;**
- **inspection door:** to inspect and to clean the wheel and the scroll inside;
- **discharge cap:** it eliminates the condensate if any inside the fan and it is situated on the lowest part of the scroll.
- **vibrating proof joints in intaking and pressing time:** they are used to avoid the spreading of vibrations to the pipes;
- **safety grate for intaking throat:** it is used to avoid accidents when the fan is intaking from the room;
- **regulation lock on delivery:** it is used to regulate the fan delivery;
- **regulator of the flow rate in intaking time:** it is used to regulate the fan flow rate and it maintains high the efficiency level, also in regulating time.

SPECIAL CONSTRUCTIONS

Spark proof construction: when explosive fluids are carried or when the plant is installed in dangerous environments, the parts that come into contact with the intaken fluid are constructed by material without iron content to avoid rubbing, motor on request is supplied in special construction.
Corosionproofing construction: when corrosive fluids are carried, the parts that come into contact with the fluid are painted with special paints or they are constructed with special materials as austentic stainless steels (AISI 304-316 etc.).Constructions can be effected according to the customer's particular needs.

SOME VALUES OF AIR SPEED THAT MUST BE OBSERVED INSIDE THE IRON PIPES FOR SUCTION PLANTS, RELATING TO FOLLOWING MATERIALS:

Cereals dust	16–19 m/s
Varnish dust	15–18 m/s
Wooden shaving and sawdust	18–24 m/s
Dry dust of chemicals	17–20 m/s
Coal dust	20–25 m/s
Dust of plastic material working	18–23 m/s
Foundry fumes	15–18 m/s
Lapping sharpening and bufing wheels	20–25 m/s
Fumes of solvents for degreasing	12–17 m/s
Metallic shaving and dust	25–38 m/s
Rubber dust	17–20 m/s
Any toxic dust	15–25 m/s
Zinc oxide dust	18–21 m/s
Saw dust of marble	20–25 m/s
Hides buffing	18–23 m/s

SOME DATA ABOUT THE NUMBER OF THE AIR CHANGINGS FORESEEN IN CIVIL, INDUSTRIAL AND AGRICULTURAL ENVIRONMENTS:

Enviroments	No. changings/hour
Hen - hutch	8
Bovine - swine breeding	10
Hotel halls -rooms - corridors	4
Garages	8
Banks	6
Bathrooms - showerbaths	6
Galvanic baths	25
Carpenter shops - welding shops	12
Heating plants	60
Churches	15
Coffee - houses - bars - restaurants	10
Cinemas - theatres	15
Dye works	15
Tanneries	18
Hide drying processes	35
Facrories for rubber production	12
Factories for alimentary pastes	6
Factories for chemicals production	15
Joineries	6
Spinning - and weaving mills	5
Foundries	25
Forge shops	25
Steam laundries	30
Rooms for electric furnaces	30
Rooms for furnace	20
Warehouses for perishable goods	15
Warehouses for unperishable goods	5
Tobacco manufactures	12
Grinding mills	20
Shops	5
Hospitals	6
Gymnasiums	20
Baker shops	15
Swimming-pools	25
Dance-halls	20
Card-rooms	10
Waiting-rooms	10
Schools	6
Metallurgical works	5
Supermarkets	5
Dyeing plants	30
Printing shops	20
Toilettes	30
Technical departments	15

www.gotrading.co.th
GreatOrientalTrading

series MNb SPECIFICATIONS

USE:

the hight output centrifugal fans of this series are suitable for the suction of dusts, fumes, granulates, sawings or also wooden shavings of minimum sizes and materials in general mixed with air **excluding filament material.**

Their main feature is that of joining up the high output (deriving from the use of a fan wheel with reversed blades, special profile) with the suitability of transporting materials mixed with air Besides, these fans are distinguished by a very flat curve of the absorbed power, such as to not overload the motor neither when working with free throats.

They are assembled in carpenter shops, mechanical industries, cement factories, ceramic factories, tanneries, foundries, in the molinary and chemical industries, and in all those applications where it is necessary to transport harmful air with max. temperature of 90°C.

For temperatures of the transported fluid higher than 90°C up to 350°C a small heat stopping fan is splined to the shaft between support and scroll; besides the fan is painted with a special aluminium paint suitable for high temperatures.

Operating range

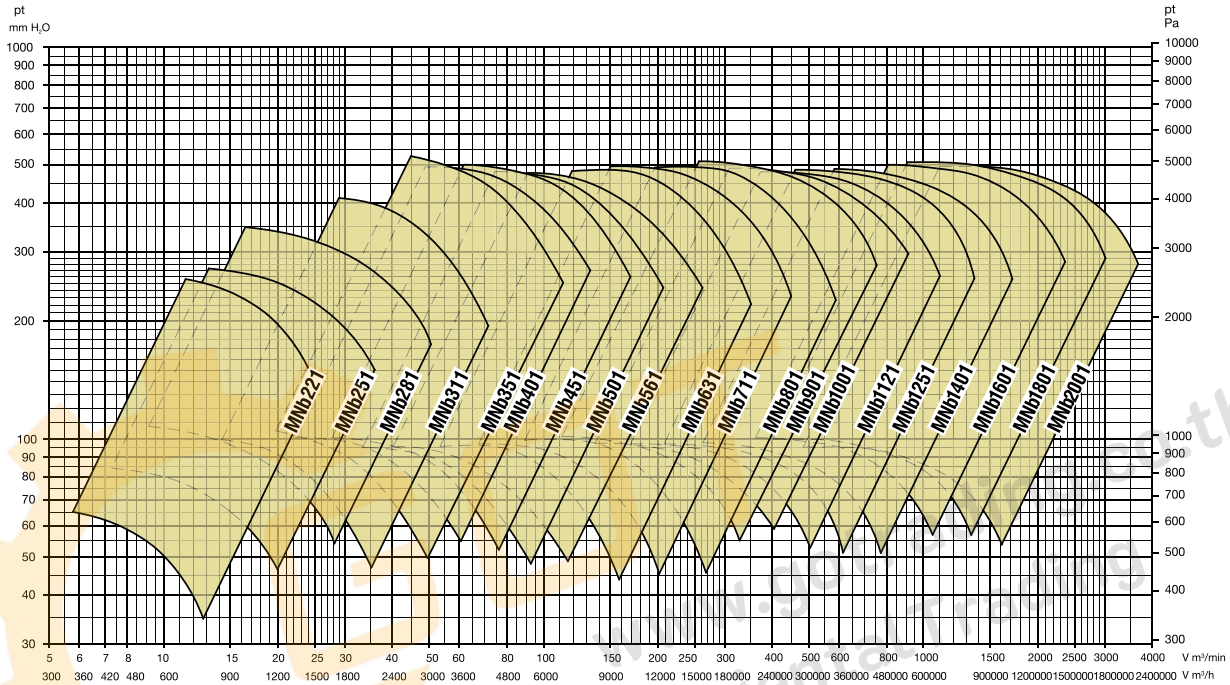

SERIES MNb 221 SPECIFICATIONS

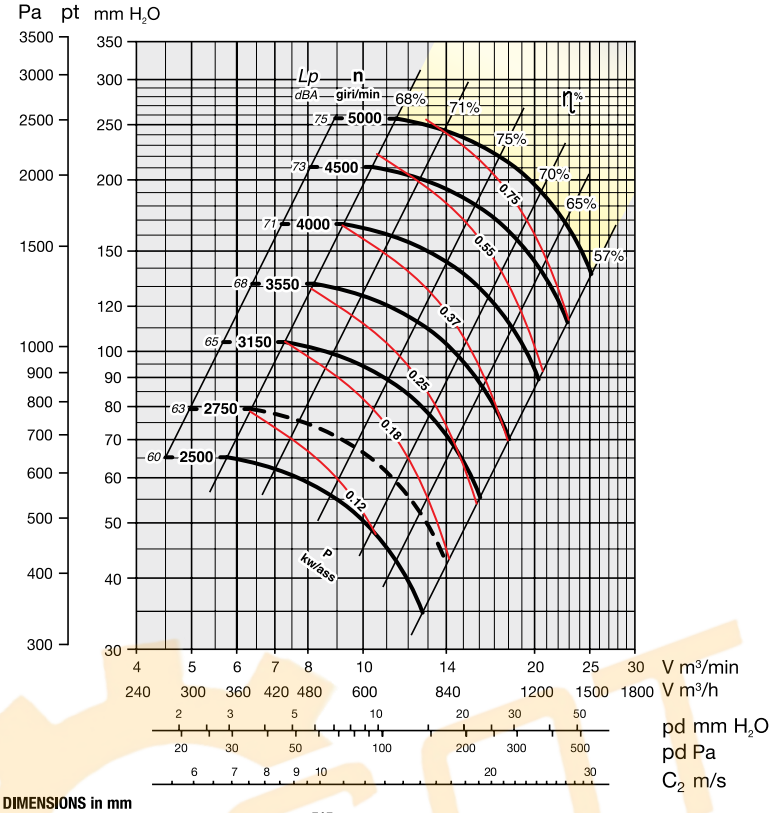

YELLOW ZONE - Consult technical office

Maximum admissible rounds:

<90°C = 5000 rounds/min.
90–200°C = 4250 rounds/min.
200–350°C = 3550 rounds/min.

Noise level tolerance + 3 dBA

KW consumed fan tolerance ± 3%

OVERALL DIMENSIONS in mm

PD^2
GD^2 = 0,08 kgm^2

Weight kg 19

Support 20 AL 19
20 B 19

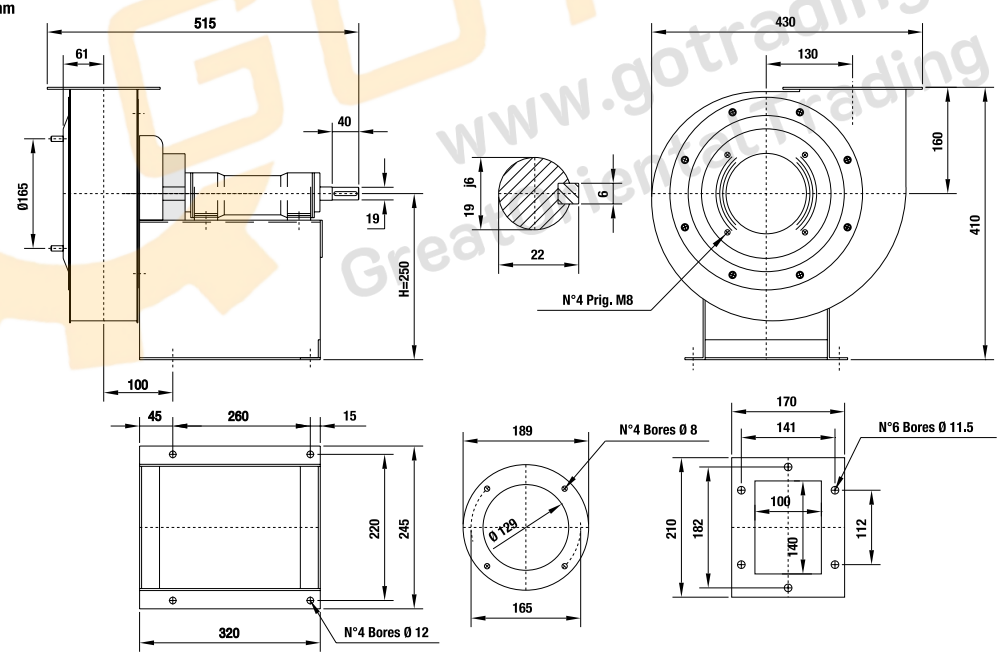

The fan is revolvable

UNI ISO 13349 rules orientations (transmission side)

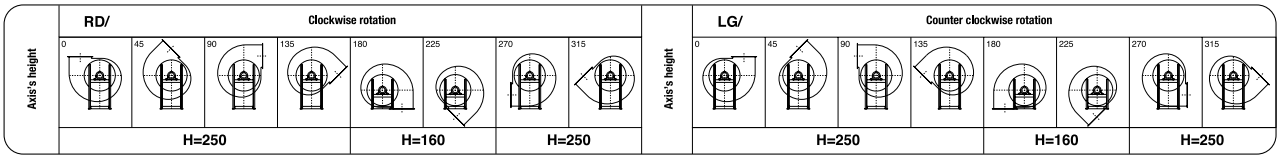

www.gotrading.co.th
Great Energy Trading

SERIES MNb 251 SPECIFICATIONS

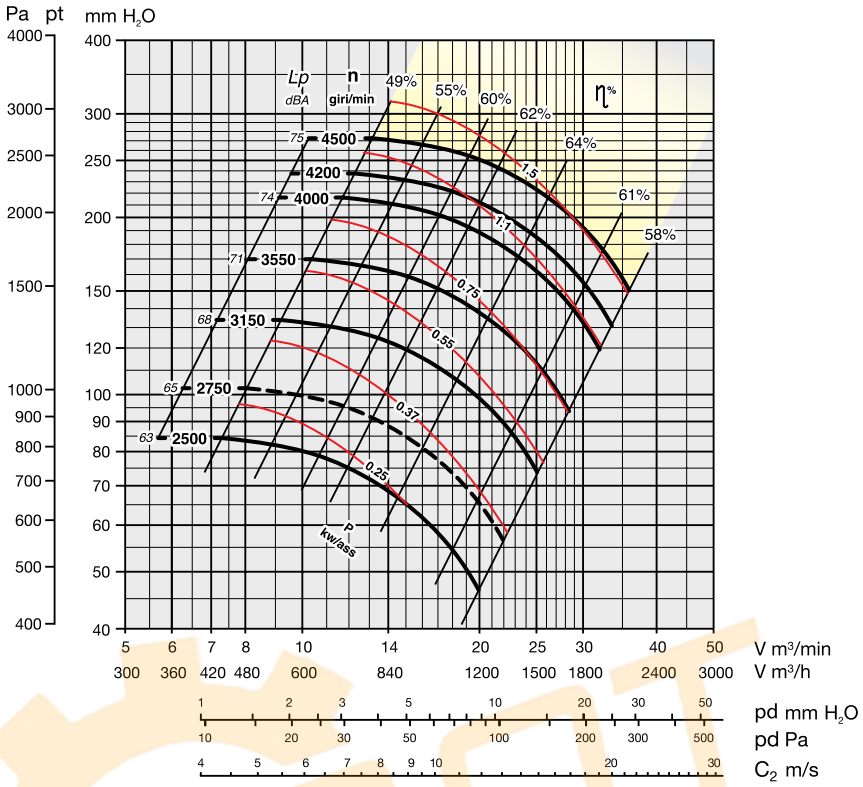

YELLOW ZONE - Consult technical office

Maximum admissible rounds:

<90°C = 4500 rounds/min.
90–200°C = 4000 rounds/min.
200–350°C = 3550 rounds/min.

Noise level tolerance + 3 dBA

KW consumed fan tolerance ± 3%

OVERALL DIMENSIONS in mm

PD^2 / GD^2 = 0,10 kgm²

Weight kg 25

Support 20 AL 19
20 B 19

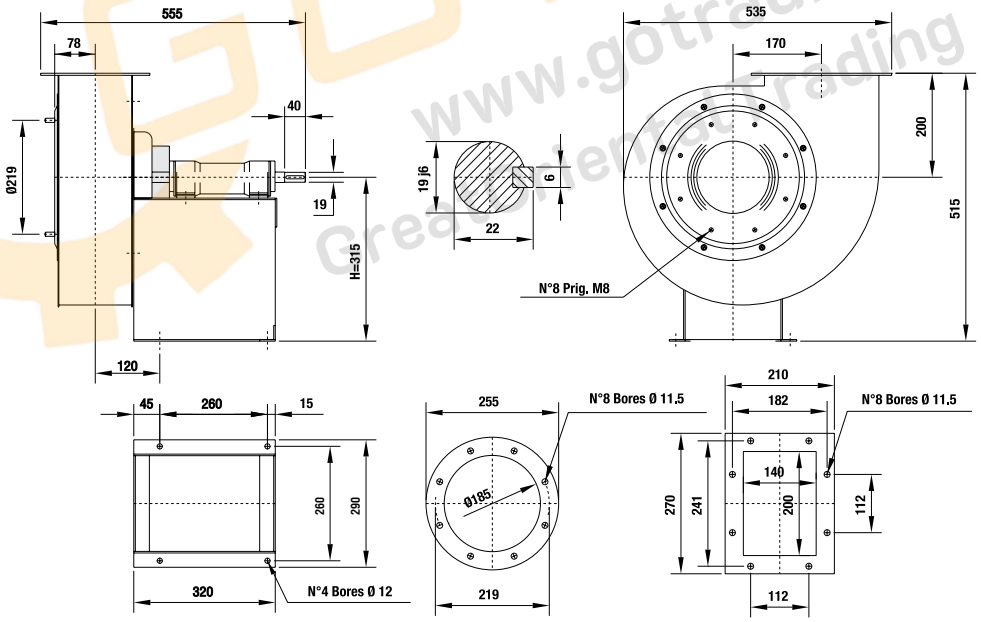

The fan is revolvable

UNI ISO 13349 rules orientations (transmission side)

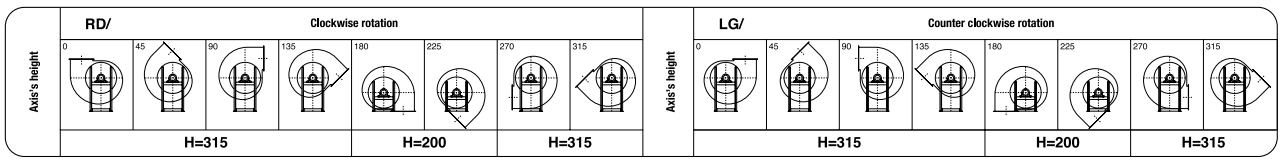

www.gotrading.co.th
Great Enterprise Trading

SERIES MNb 281 SPECIFICATIONS

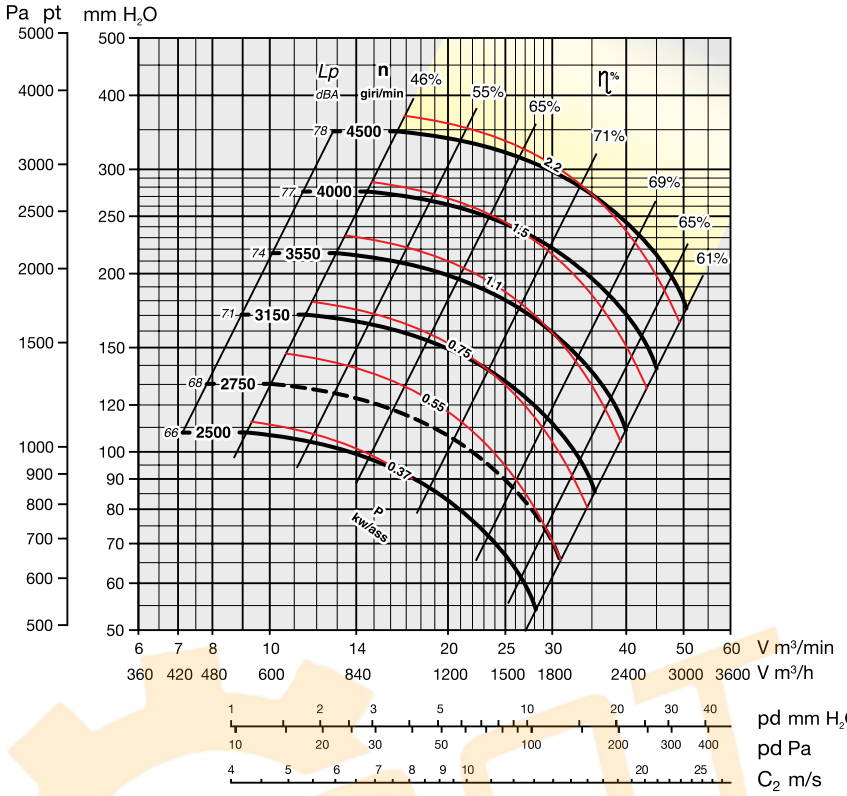

YELLOW ZONE - Consult technical office

Maximum admissible rounds:

<90°C = 4500 rounds/min.
90–200°C = 4000 rounds/min.
200–350°C = 3550 rounds/min.

Noise level tolerance + 3 dBA

KW consumed fan tolerance ± 3%

OVERALL DIMENSIONS in mm

PD^2
GD^2 = 0,15 kgm²

Weight kg 33

Support 20 AL 19
20 B 19

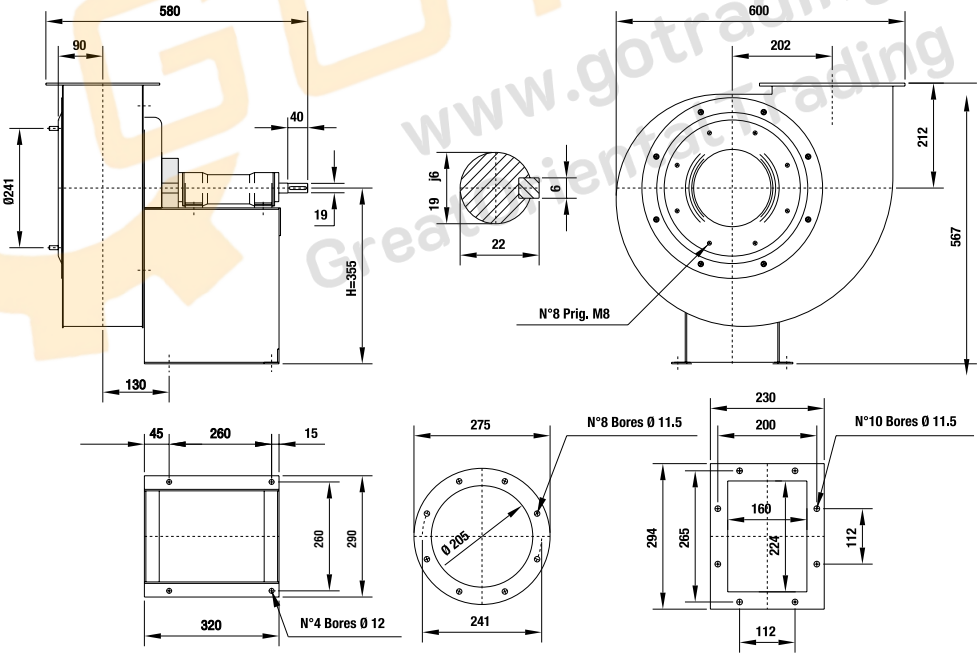

The fan is revolvable

UNI ISO 13349 rules orientations (transmission side)

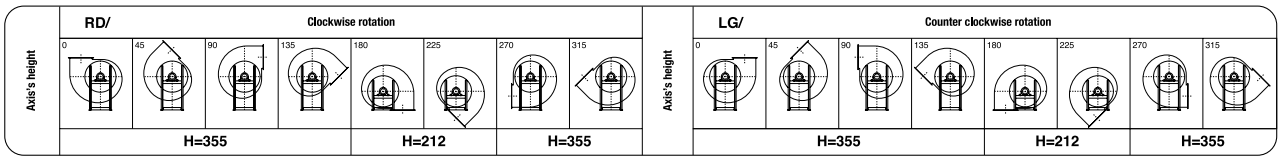

www.gotrading.co.th
Great Quality Trading

SERIES MNb 311 SPECIFICATIONS

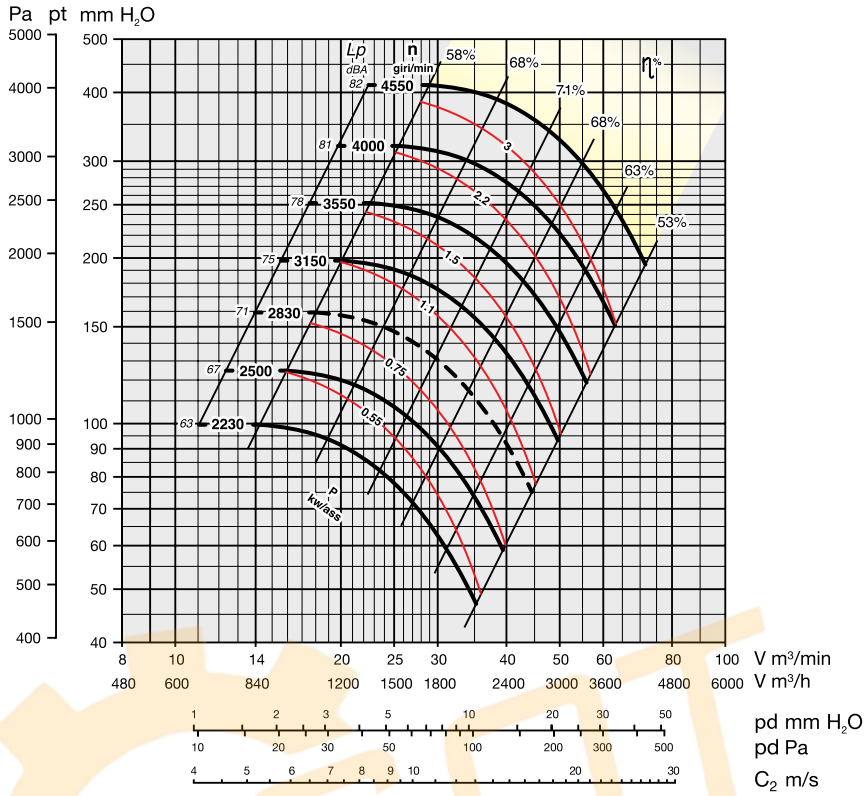

YELLOW ZONE - Consult technical office

Maximum admissible rounds:

<90°C = 4550 rounds/min.
90–200°C = 4000 rounds/min.
200–350°C = 3550 rounds/min.

Noise level tolerance + 3 dBA

KW consumed fan tolerance ± 3%

OVERALL DIMENSIONS in mm

PD^2
GD^2 = 0.20 kgm^2

Weight kg 42

Support 25 AL 24
25 B 24

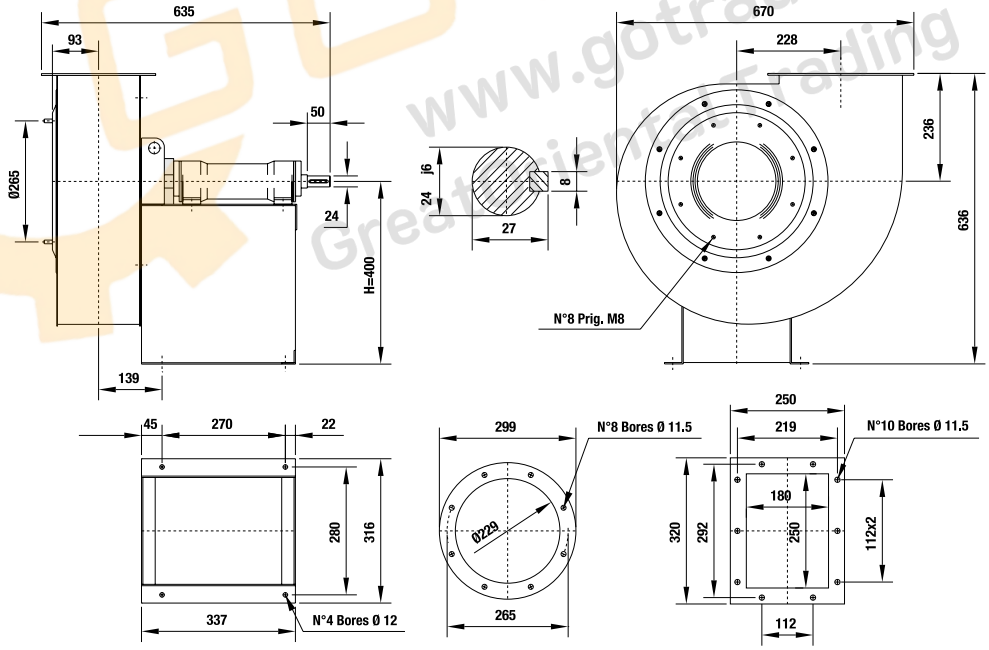

The fan is revolvable

UNI ISO 13349 rules orientations (transmission side)

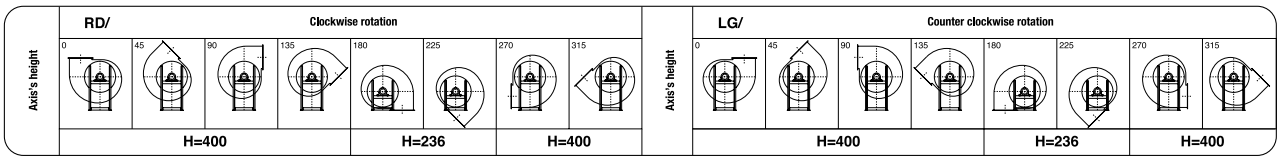

www.gotrading.co.th
Great Oriental Trading

SERIES MNb 351 SPECIFICATIONS

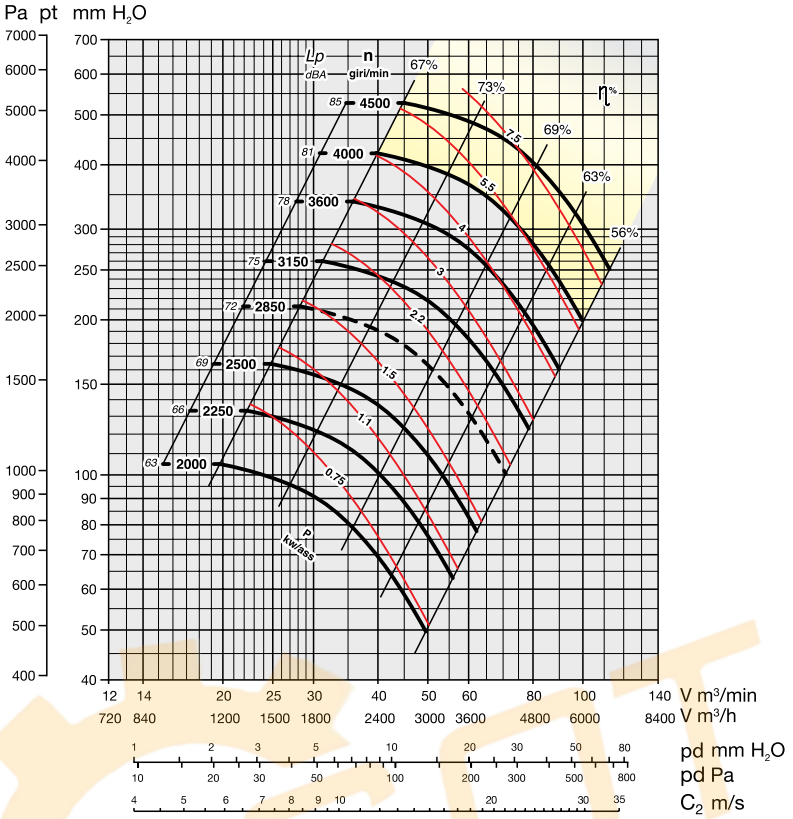

YELLOW ZONE - Consult technical office

Maximum admissible rounds:

<90°C = 4500 rounds/min.
90–200°C = 3600 rounds/min.
200–350°C = 3150 rounds/min.

Noise level tolerance + 3 dBA

KW consumed fan tolerance ± 3%

OVERALL DIMENSIONS in mm

PD^2
GD^2 = 0,52 kgm^2

Weight kg 65

Support 25 AL 24
25 BR 24

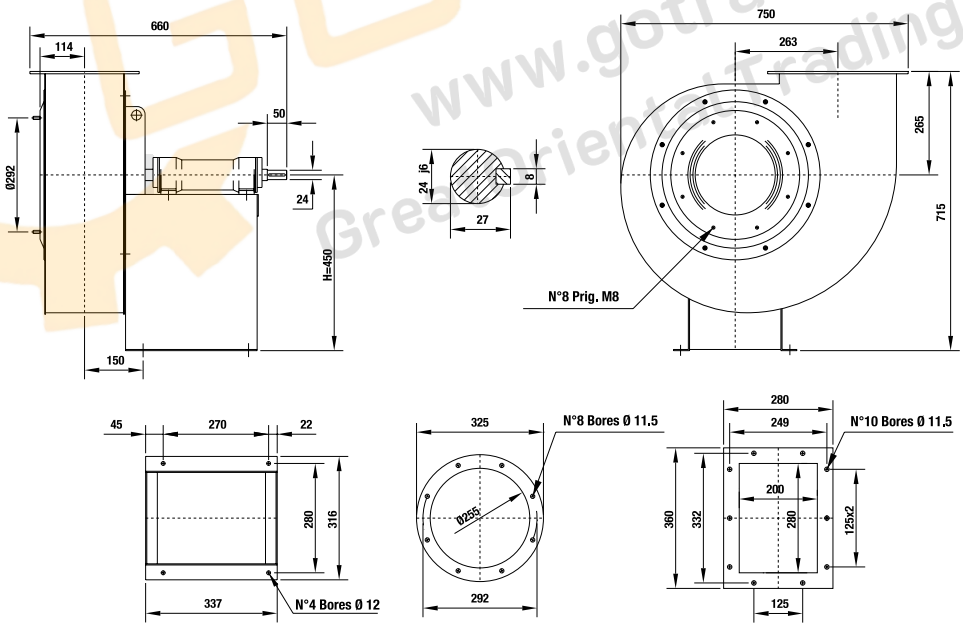

The fan is revolvable

UNI ISO 13349 rules orientations (transmission side)

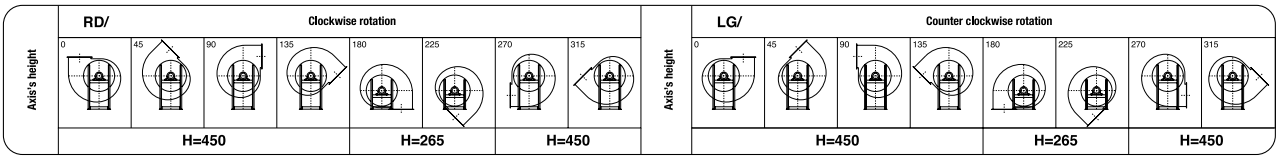

www.gotrading.co.th
Great Orient Trading

SERIES MNb 401 SPECIFICATIONS

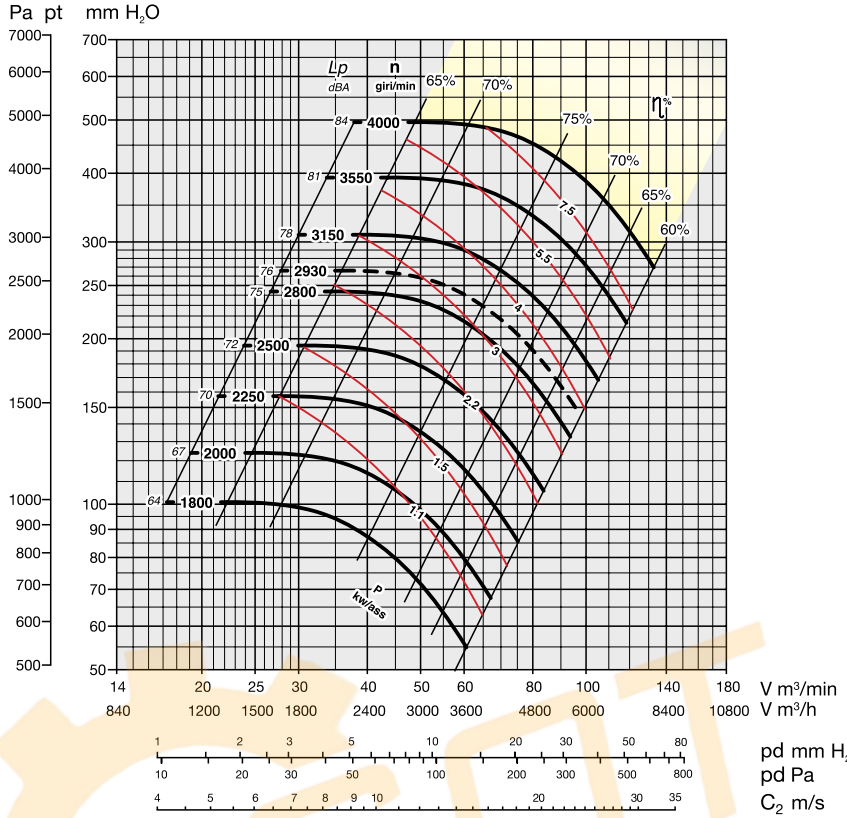

YELLOW ZONE - Consult technical office

Maximum admissible rounds:

<90°C = 4000 rounds/min.
90–200°C = 3550 rounds/min.
200–350°C = 3000 rounds/min.

Noise level tolerance + 3 dBA

KW consumed fan tolerance ± 3%

OVERALL DIMENSIONS in mm

PD^2
GD^2 = 0,75 kgm^2

Weight kg 86

Support 35 AL 28
35 BR 28

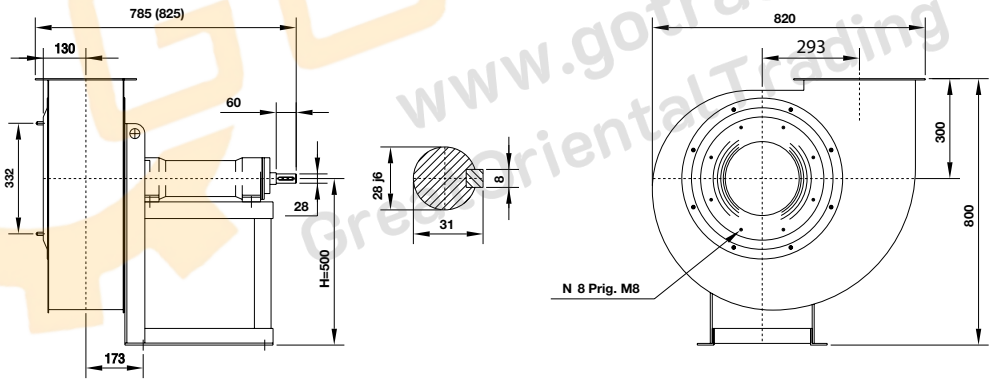

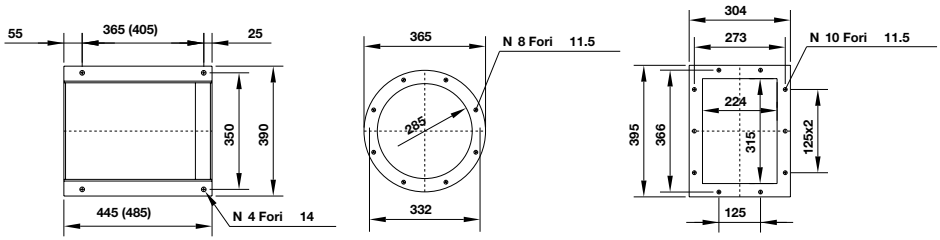

The fan is revolvable

UNI ISO 13349 rules orientations (transmission side)

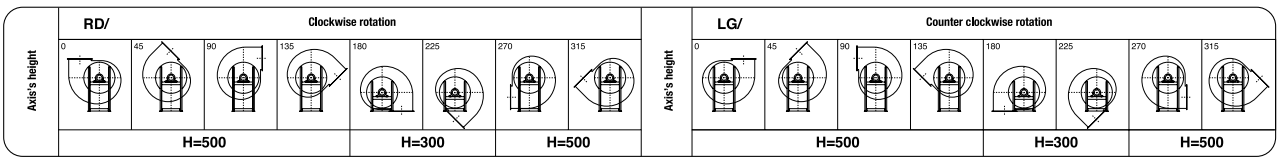

www.gotrading.co.th
GreatOrientalTrading

SERIES MNb 451 SPECIFICATIONS

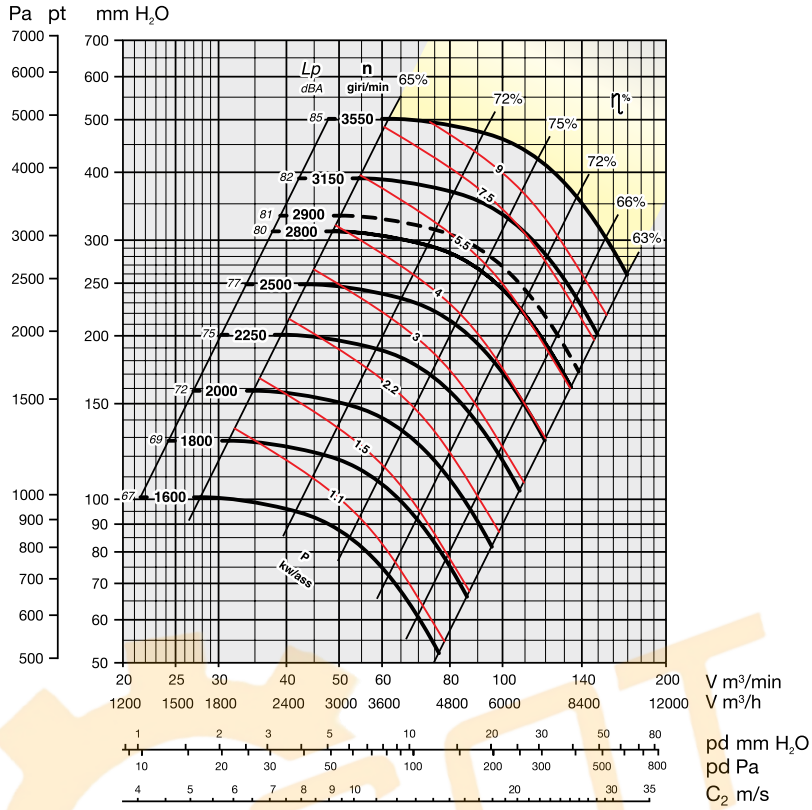

YELLOW ZONE - Consult technical office

Maximum admissible rounds:

<90°C = 3550 rounds/min.
90–200°C = 3150 rounds/min.
200–350°C = 2650 rounds/min.

Noise level tolerance + 3 dBA

KW consumed fan tolerance ± 3%

N.B.: For constructive reasons, the fans from size 451÷501 follow an orientation with angles of 30°instead of 45°. Therefore, when you place an order, you must clearly indicate if 45° are required.

OVERALL DIMENSIONS in mm

PD^2
GD^2 = 1,8 kgm²

Weight kg 102

Support 40 AL 38
40 B 38

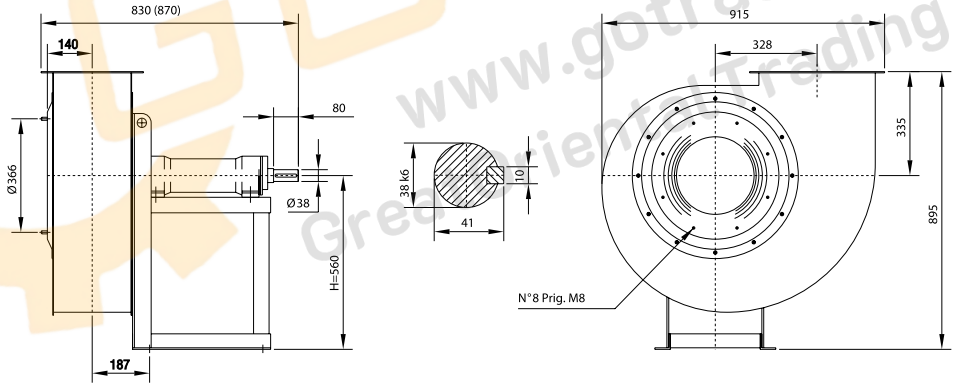

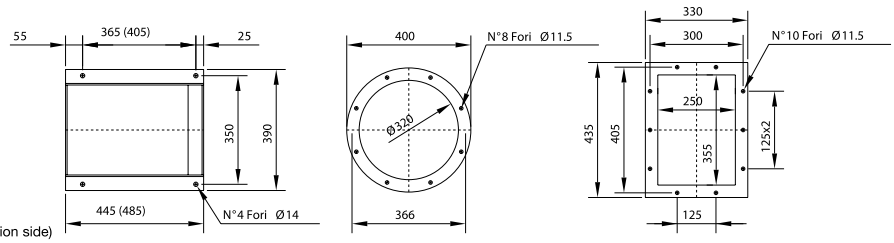

The fan is revolvable

UNI ISO 13349 rules orientations (transmission side)

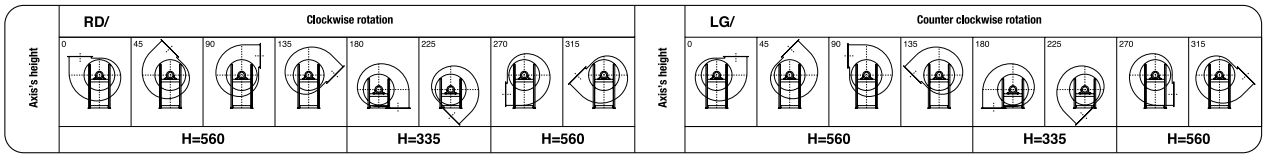

www.gotrading.co.th
Great Orient Trading

SERIES MNb 501 SPECIFICATIONS

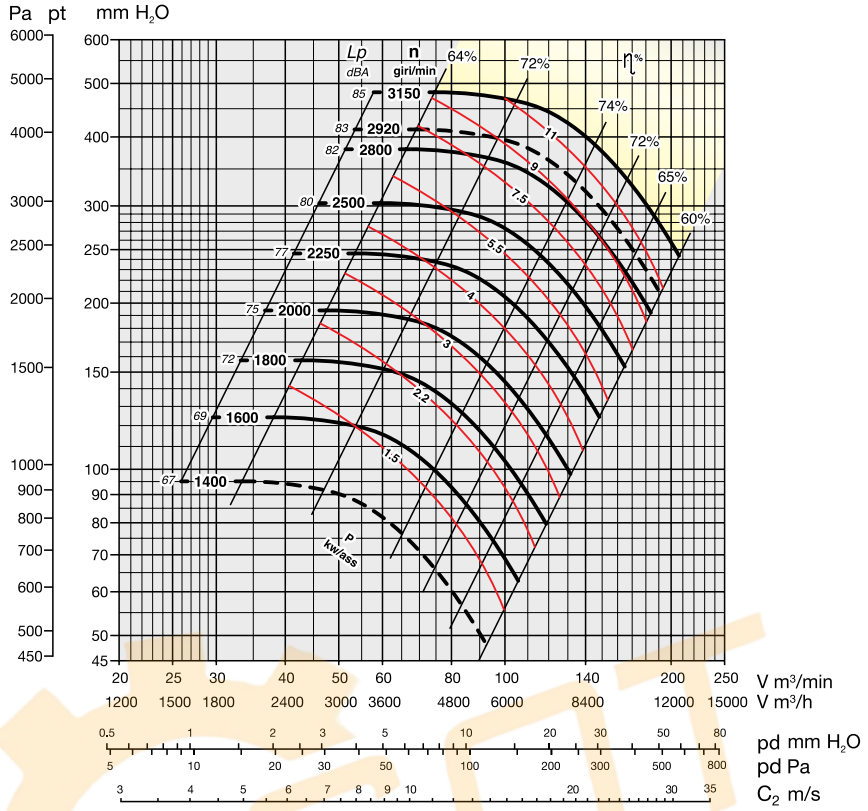

YELLOW ZONE - Consult technical office

Maximum admissible rounds:

<90°C = 3150 rounds/min.
90–200°C = 2800 rounds/min.
200–350°C = 2350 rounds/min.

Noise level tolerance + 3 dBA

KW consumed fan tolerance ± 3%

N.B.: For constructive reasons, the fans from size 451÷501 follow an orientation with angles of 30°instead of 45°. Therefore, when you place an order, you must clearly indicate if 45° are required.

OVERALL DIMENSIONS in mm

PD^2
GD^2 = 2,9 kgm^2

Weight kg 128

Support 45 AL 42
45 B 42

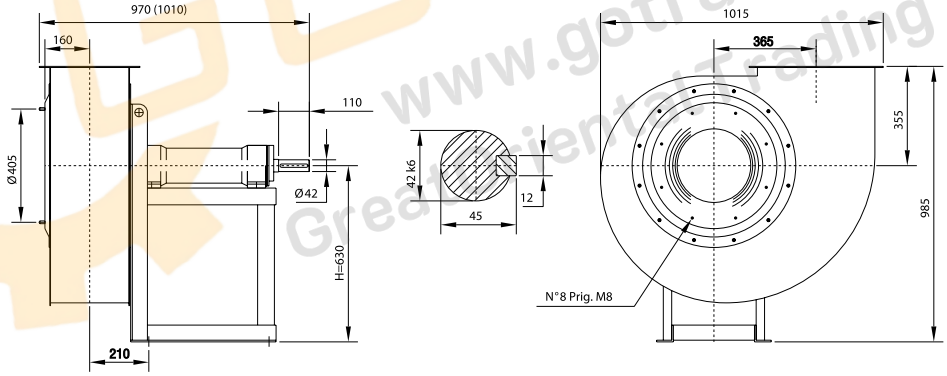

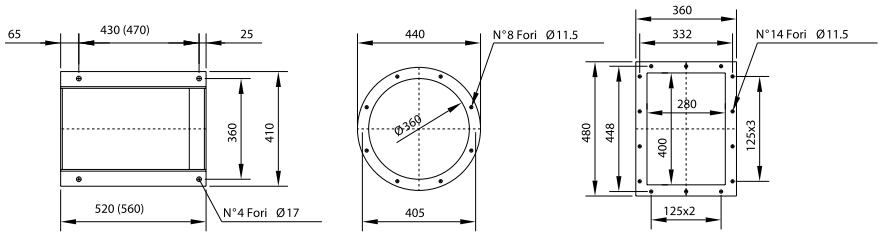

The fan is revolvable

UNI ISO 13349 rules orientations (transmission side)

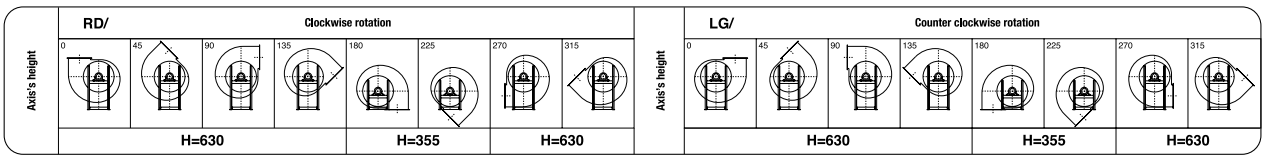

www.gotrading.co.th
Great Oriental Trading

SERIES MNb 561 SPECIFICATIONS

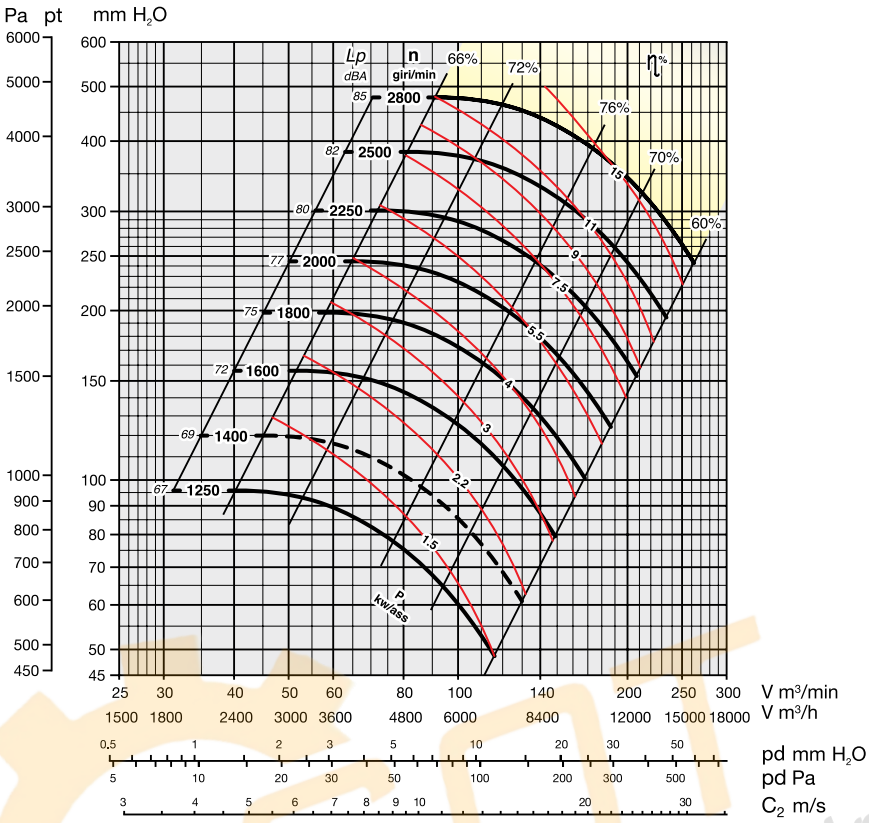

YELLOW ZONE - Consult technical office

Maximum admissible rounds:

<90°C = 2800 rounds/min.
90–200°C = 2500 rounds/min.
200–350°C = 2000 rounds/min.

Noise level tolerance + 3 dBA

KW consumed fan tolerance ± 3%

OVERALL DIMENSIONS in mm

PD^2 / GD^2 = 3,5 kgm²

Weight kg 166

Support 45 AL 42
45 B 42

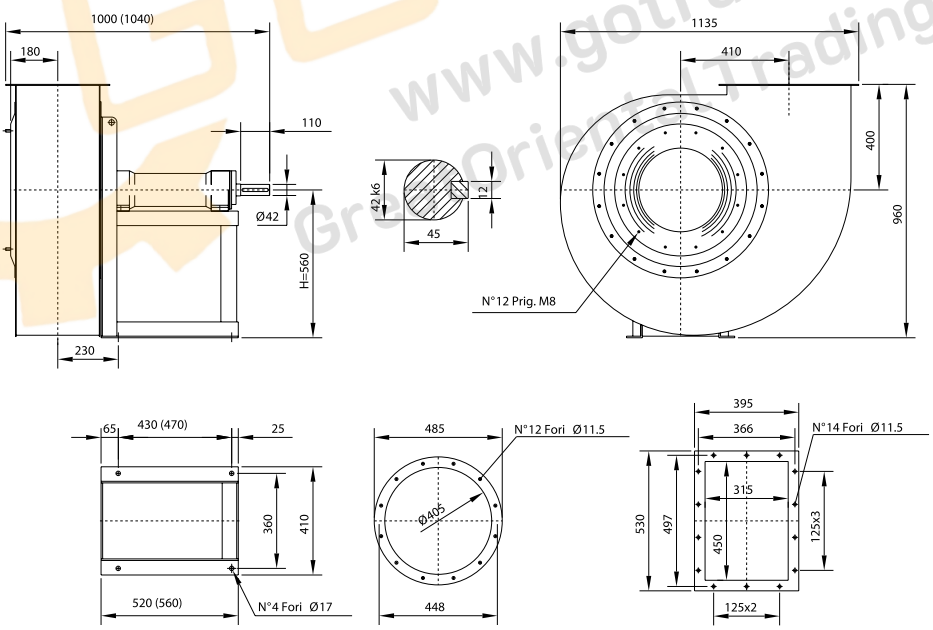

The fan is revolvable

UNI ISO 13349 rules orientations (transmission side)

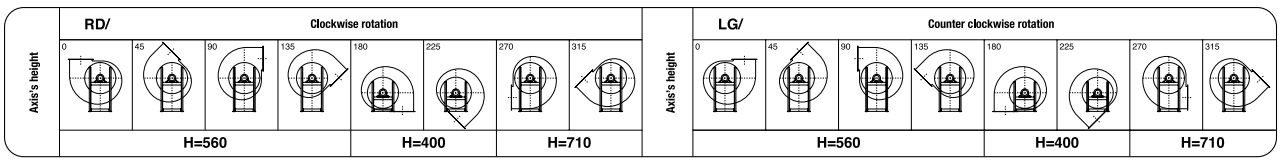

www.gotrading.co.th
Great Oriental Trading

SERIES MNb 631 SPECIFICATIONS

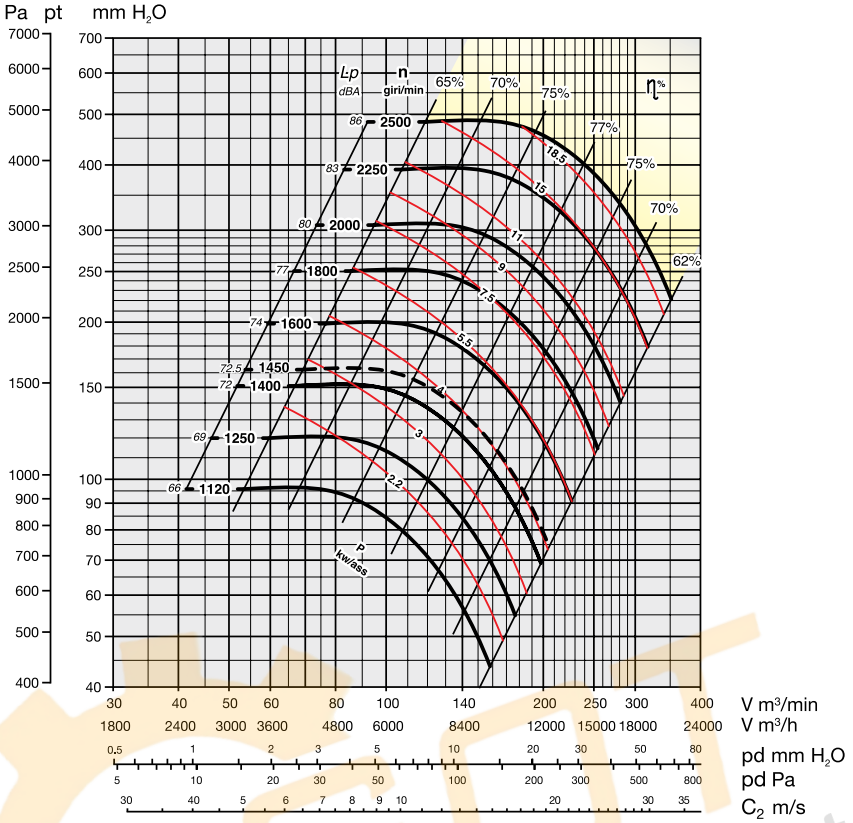

YELLOW ZONE - Consult technical office

Maximum admissible rounds:

<90°C = 2500 rounds/min.
90–200°C = 2200 rounds/min.
200–350°C = 1800 rounds/min.

Noise level tolerance + 3 dBA

KW consumed fan tolerance ± 3%

OVERALL DIMENSIONS in mm

PD^2 / GD^2 = 5,2 kgm²

Weight kg 202

Support 50 AL 48
50 B 48

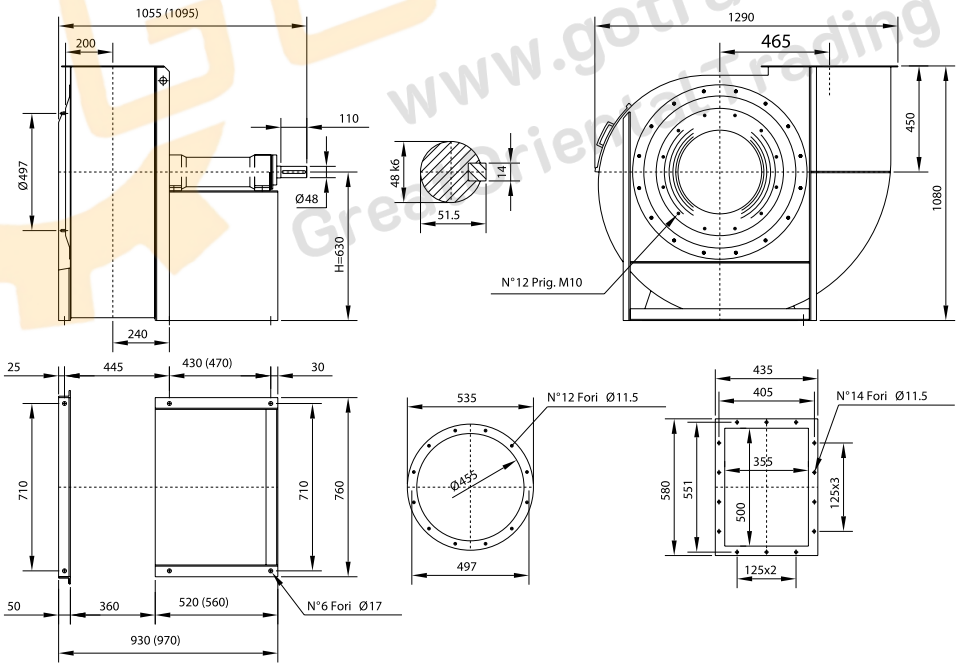

The fan is revolvable

UNI ISO 13349 rules orientations (transmission side)

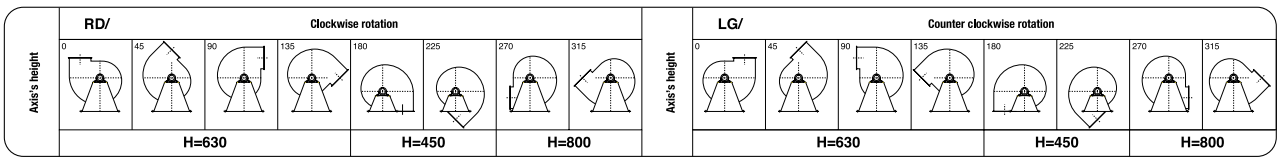

www.gotrading.co.th
Great Orient Trading

SERIES MNb 711 SPECIFICATIONS

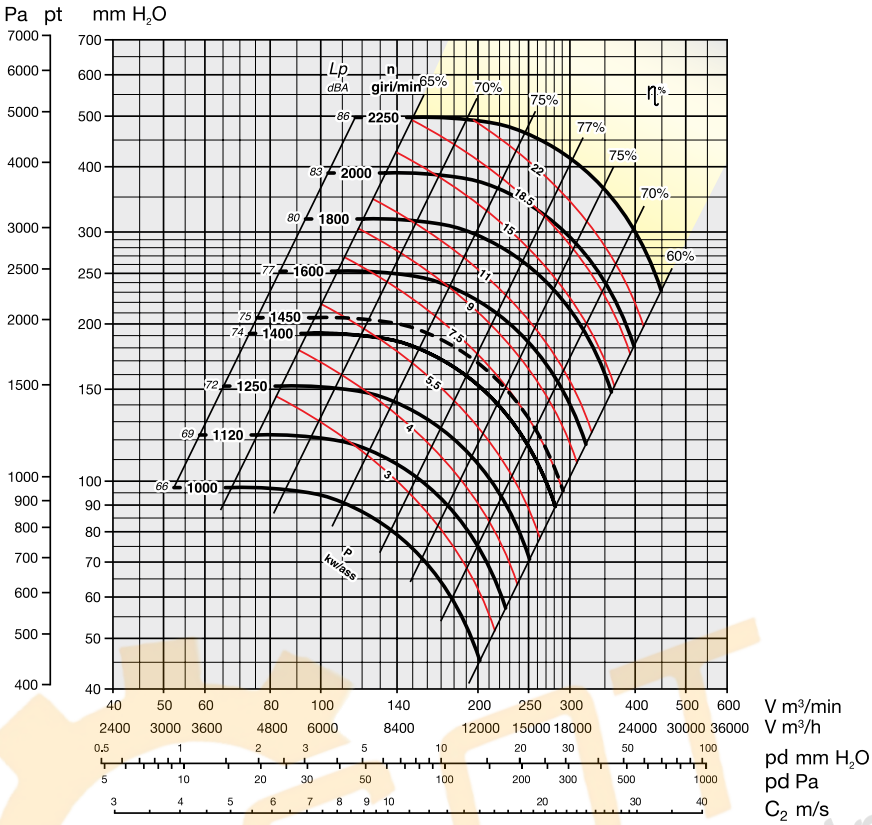

YELLOW ZONE - Consult technical office

Maximum admissible rounds:

<90°C = 2250 rounds/min.
90–200°C = 2000 rounds/min.
200–350°C = 1650 rounds/min.

Noise level tolerance + 3 dBA

KW consumed fan tolerance ± 3%

OVERALL DIMENSIONS in mm

Fan with cooling fan

PD^2 / GD^2 = 8,5 kgm²

Weight kg 306

Support 50 AR 48
50 BR 48

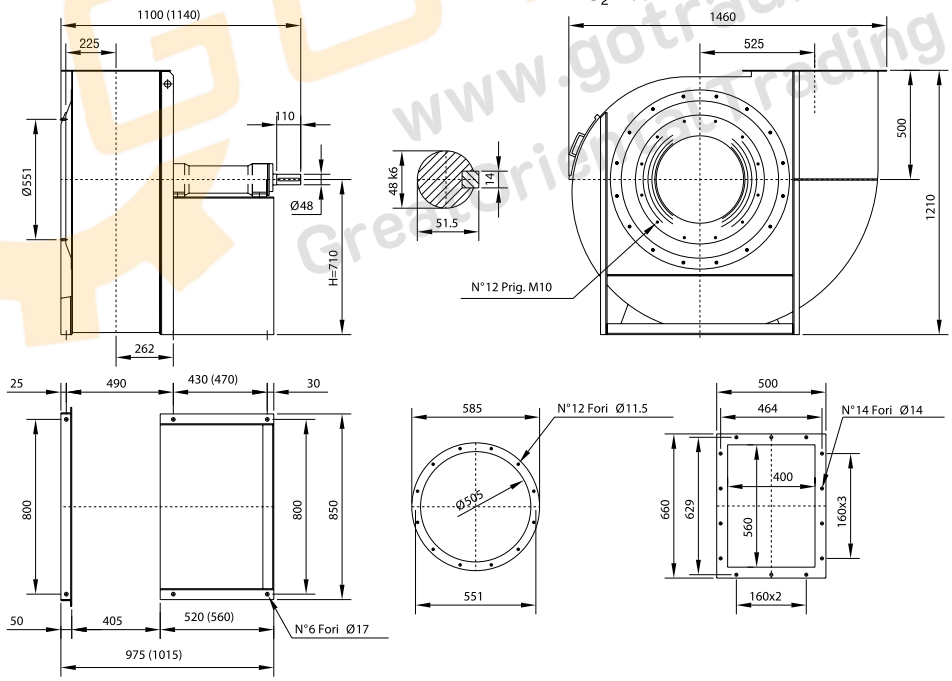

The fan is not revolvable

UNI ISO 13349 rules orientations (transmission side)

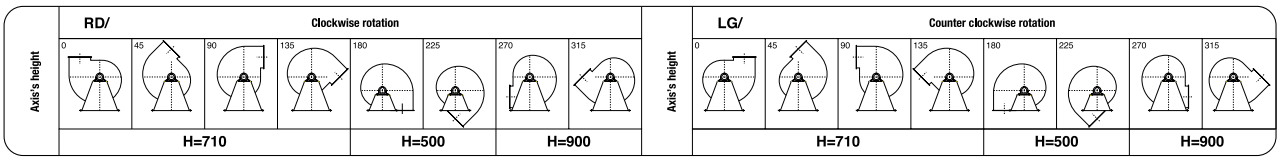

www.gotrading.co.th
Greenorient Trading

SERIES MNb 801 SPECIFICATIONS

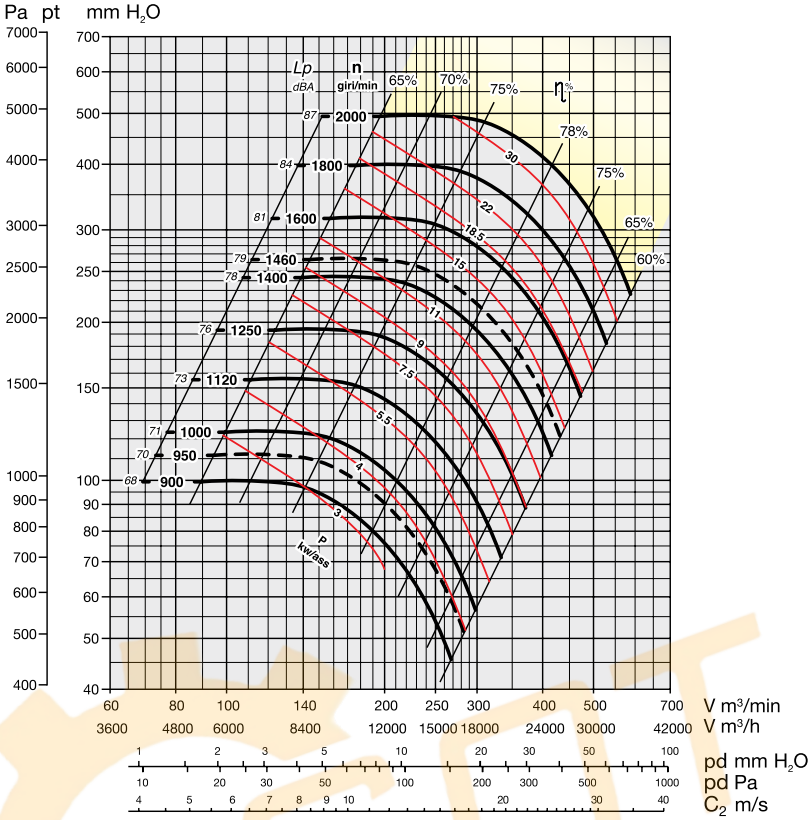

YELLOW ZONE - Consult technical office

Maximum admissible rounds:

<90°C = 2000 rounds/min.
90–200°C = 1800 rounds/min.
200–350°C = 1500 rounds/min.

Noise level tolerance + 3 dBA

KW consumed fan tolerance ± 3%

OVERALL DIMENSIONS in mm

Fan with cooling fan

PD^2
GD^2 = 17 kgm²

Weight kg 364

Support 55 AR 48
55 BR 48

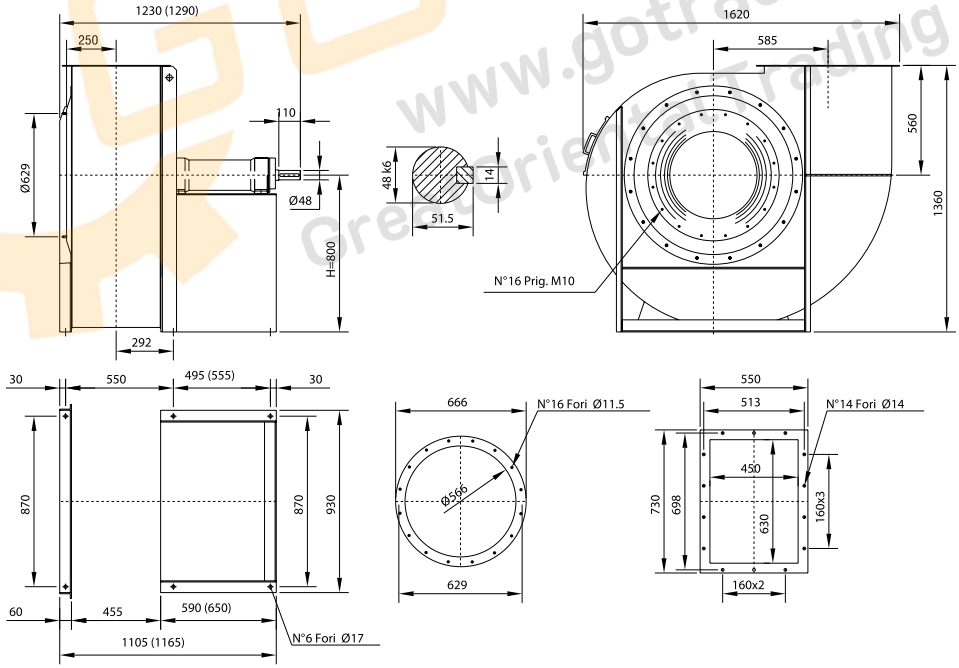

The fan is not revolvable

UNI ISO 13349 rules orientations (transmission side)

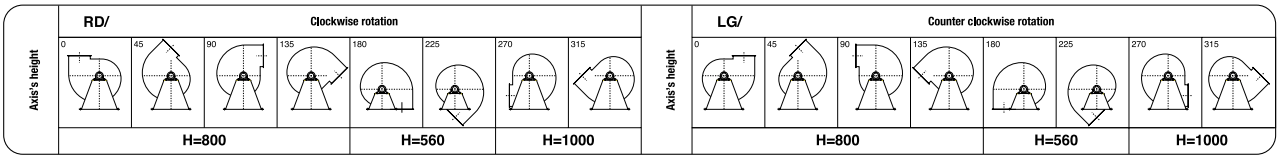

www.gotrading.co.th
Great Orient Trading

SERIES MNb 901 SPECIFICATIONS

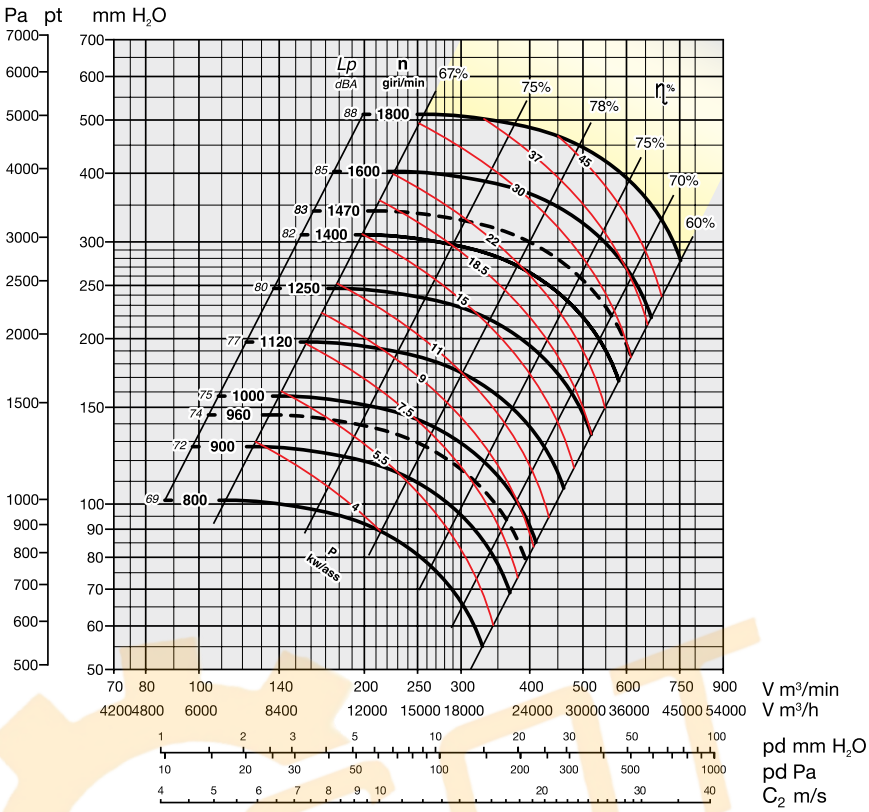

YELLOW ZONE - Consult technical office

Maximum admissible rounds:

<90°C = 1800 rounds/min.
90–200°C = 1600 rounds/min.
200–350°C = 1400 rounds/min.

Noise level tolerance + 3 dBA

KW consumed fan tolerance ± 3%

OVERALL DIMENSIONS in mm

Fan with cooling fan

PD^2 / GD^2 = 35 kgm²

Weight kg 462

Support 60 AR 55
60 BR 55

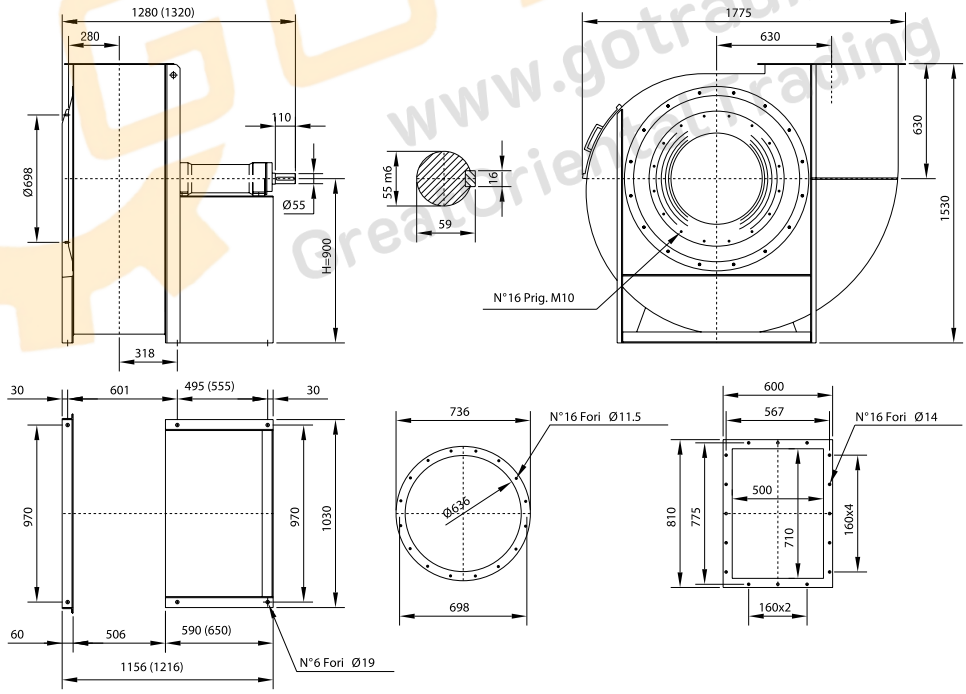

The fan is not revolvable

UNI ISO 13349 rules orientations (transmission side)

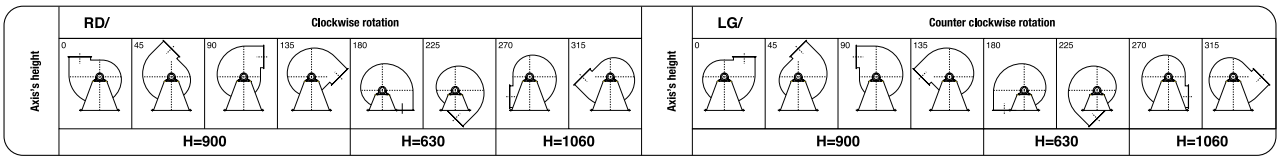

www.gotrading.co.th
Great Orient Trading

SERIES MNb 1001 SPECIFICATIONS

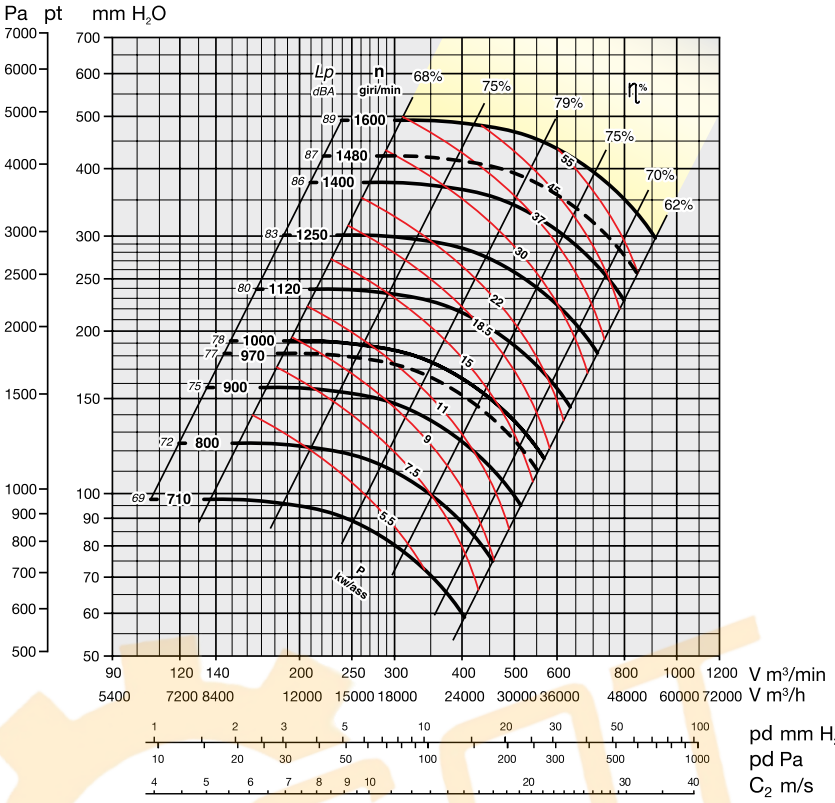

YELLOW ZONE - Consult technical office

Maximum admissible rounds:

<90°C = 1600 rounds/min.
90–200°C = 1400 rounds/min.
200–350°C = 1200 rounds/min.

Noise level tolerance + 3 dBA

KW consumed fan tolerance ± 3%

OVERALL DIMENSIONS in mm

PD^2
GD^2 = 53 kgm^2

Weight kg 640

Support SNL 516

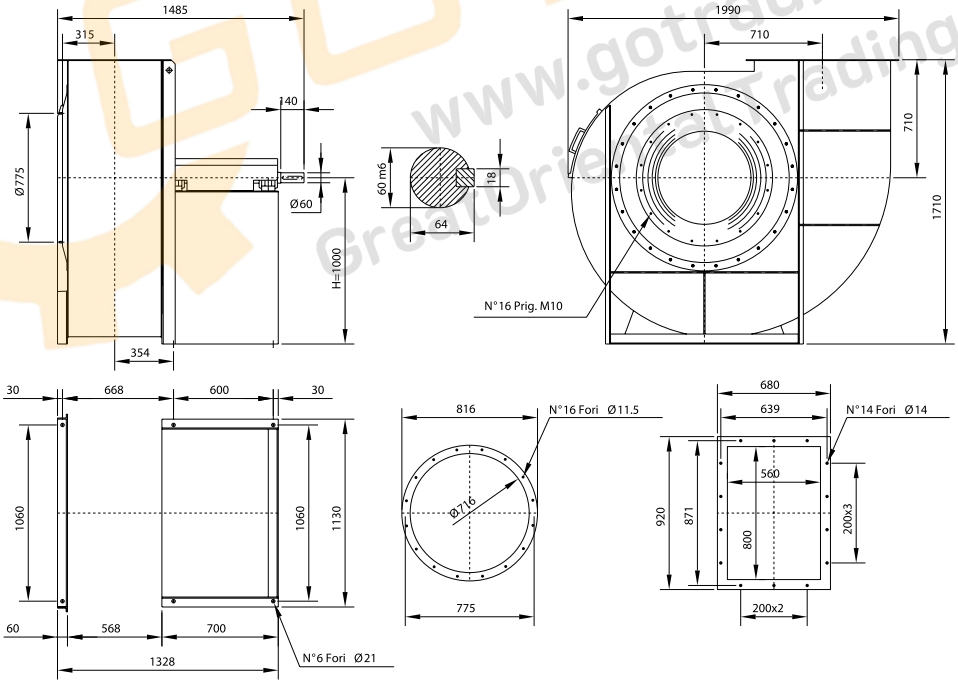

The fan is not revolvable

UNI ISO 13349 rules orientations (transmission side)

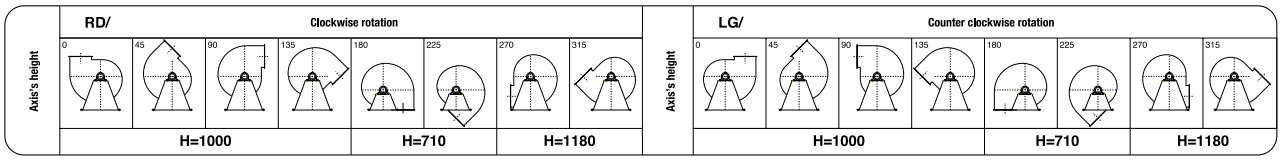

www.gotrading.co.th
GreatOrientalTrading

SERIES MNb 1121 SPECIFICATIONS

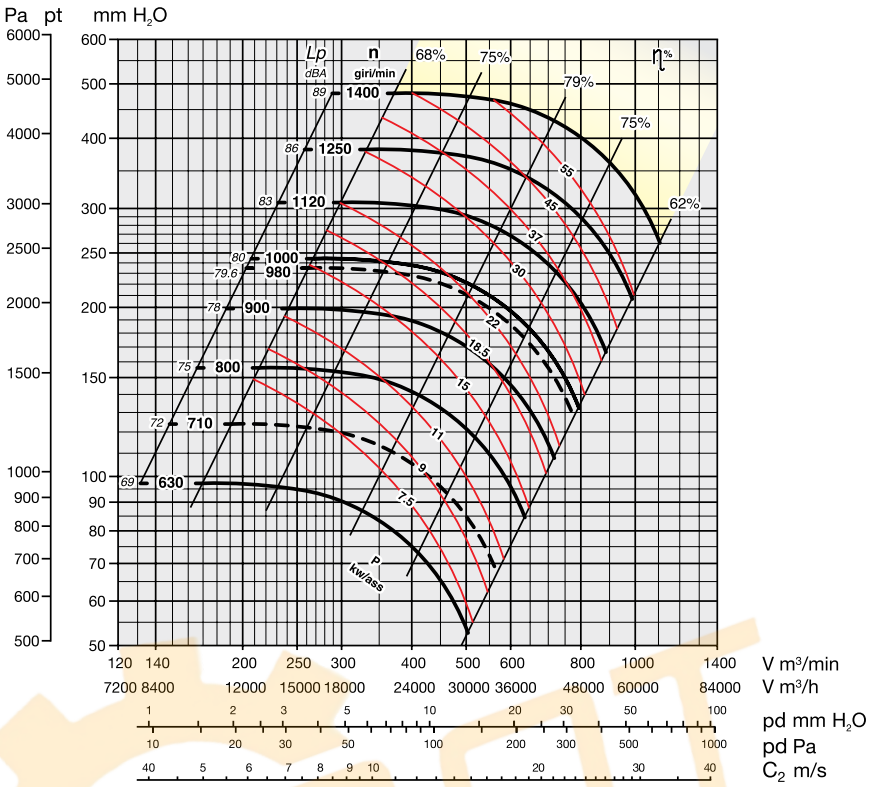

YELLOW ZONE - Consult technical office

Maximum admissible rounds:

<90°C = 1400 rounds/min.
90–200°C = 1250 rounds/min.
200–350°C = 1000 rounds/min.

Noise level tolerance + 3 dBA

KW consumed fan tolerance ± 3%

OVERALL DIMENSIONS in mm

PD^2
GD^2 = 90 kgm²

Weight kg 863

Support SNL 516

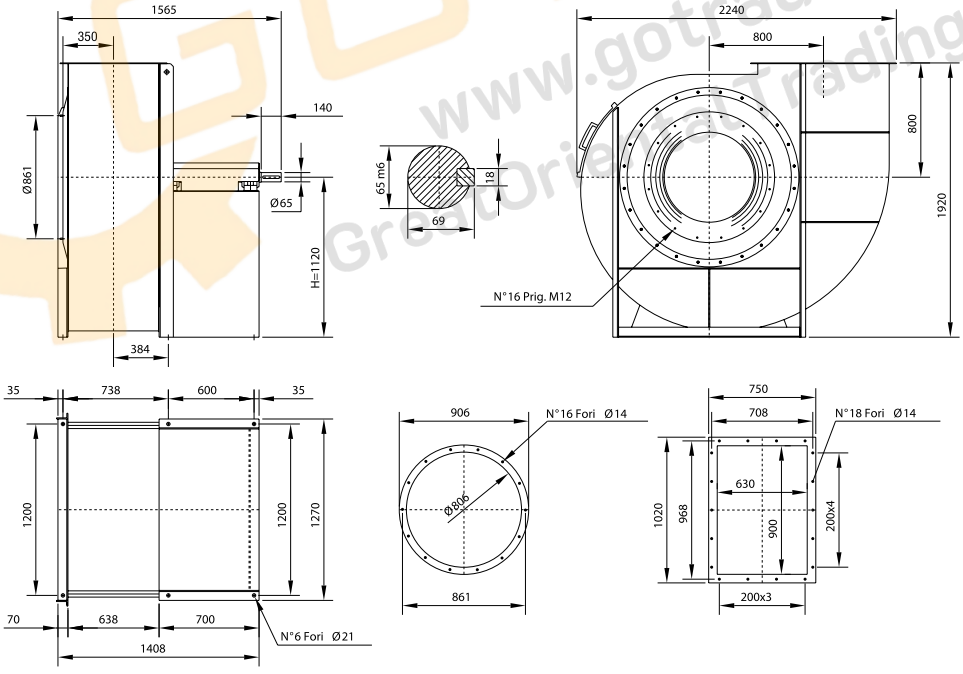

The fan is not revolvable

UNI ISO 13349 rules orientations (transmission side)

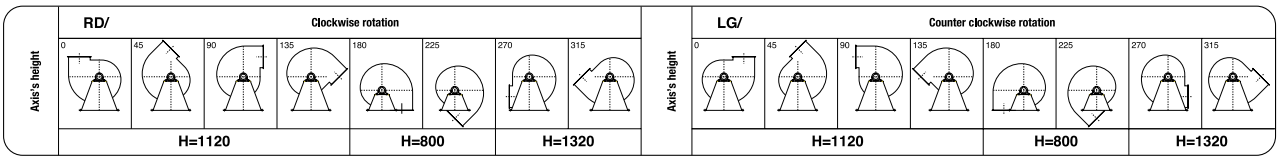

www.gotrading.co.th
Great Orient Trading

SERIES MNb 1251 SPECIFICATIONS

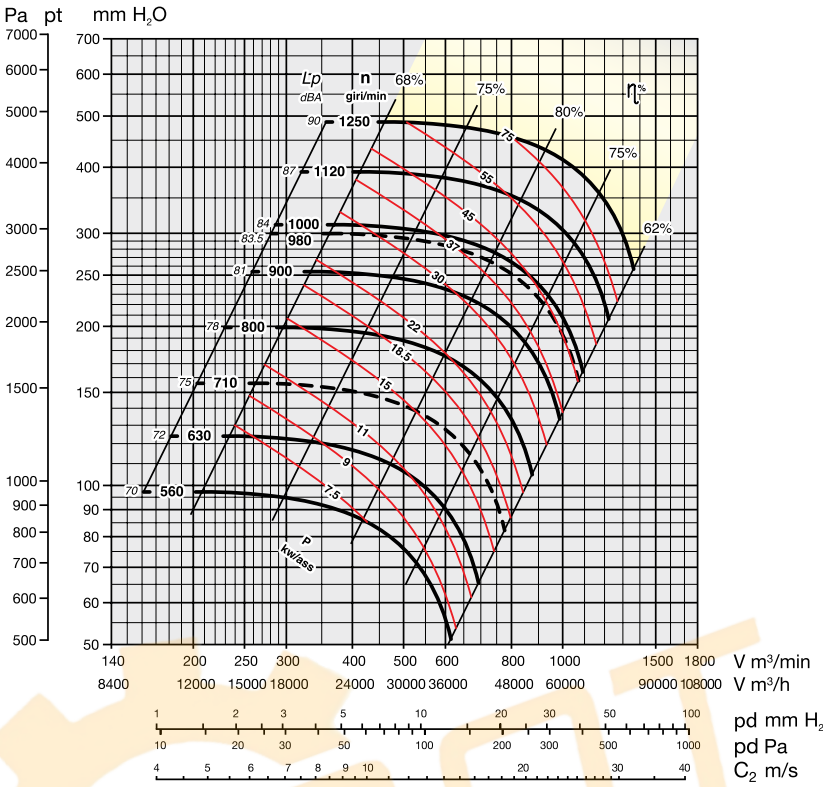

YELLOW ZONE - Consult technical office

Maximum admissible rounds:

<90°C = 1250 rounds/min.
90–200°C = 1050 rounds/min.
200–350°C = 950 rounds/min.

Noise level tolerance + 3 dBA

KW consumed fan tolerance ± 3%

OVERALL DIMENSIONS in mm

PD^2
GD^2 = 145 kgm²

Weight kg 1035

Support SNL 517

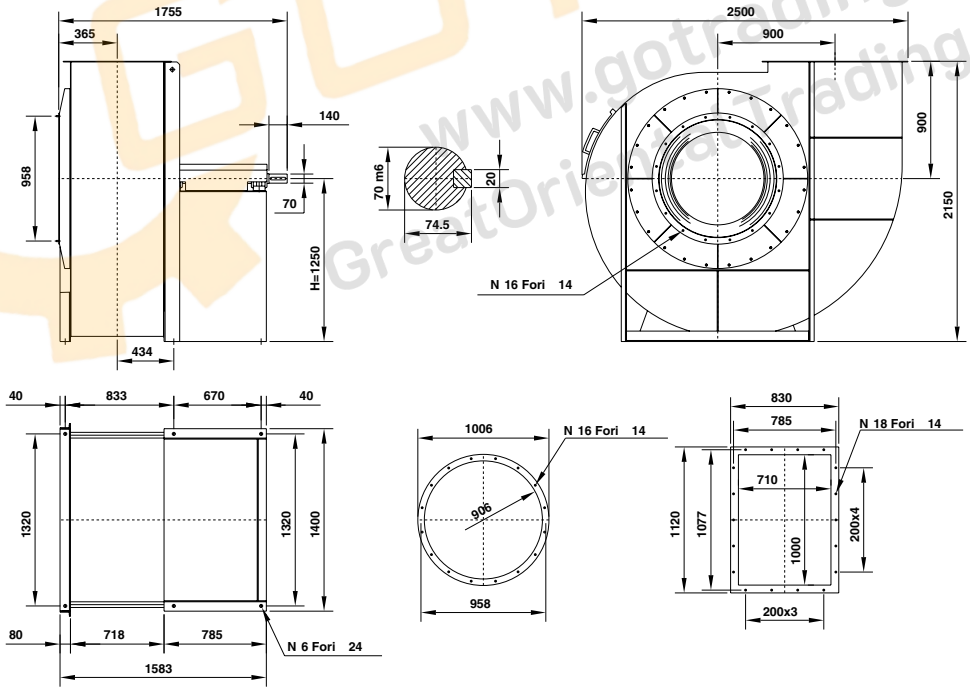

The fan is not revolvable

UNI ISO 13349 rules orientations (transmission side)

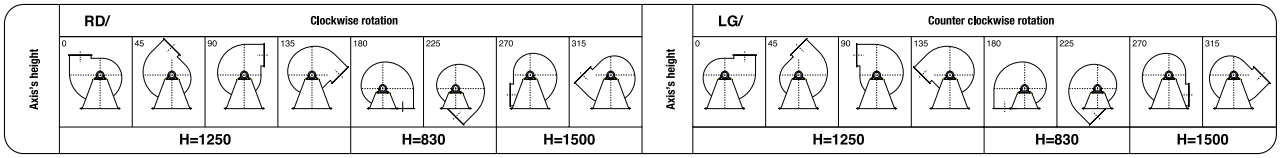

www.gotrading.co.th
GreatOriental Trading

SERIES MNb 1401 SPECIFICATIONS

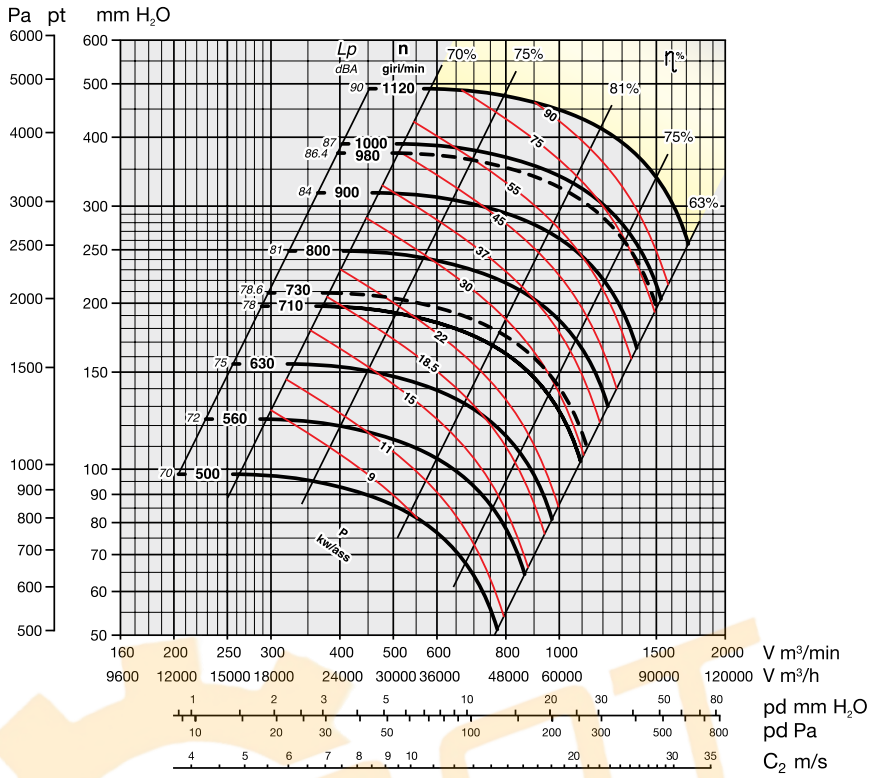

YELLOW ZONE - Consult technical office

Maximum admissible rounds:

<90°C = 1120 rounds/min.
90–200°C = 950 rounds/min.
200–350°C = 800 rounds/min.

Noise level tolerance + 3 dBA

KW consumed fan tolerance ± 3%

OVERALL DIMENSIONS in mm

PD^2
GD^2 = 260 kgm²

Weight kg 1450

Support SNL 518

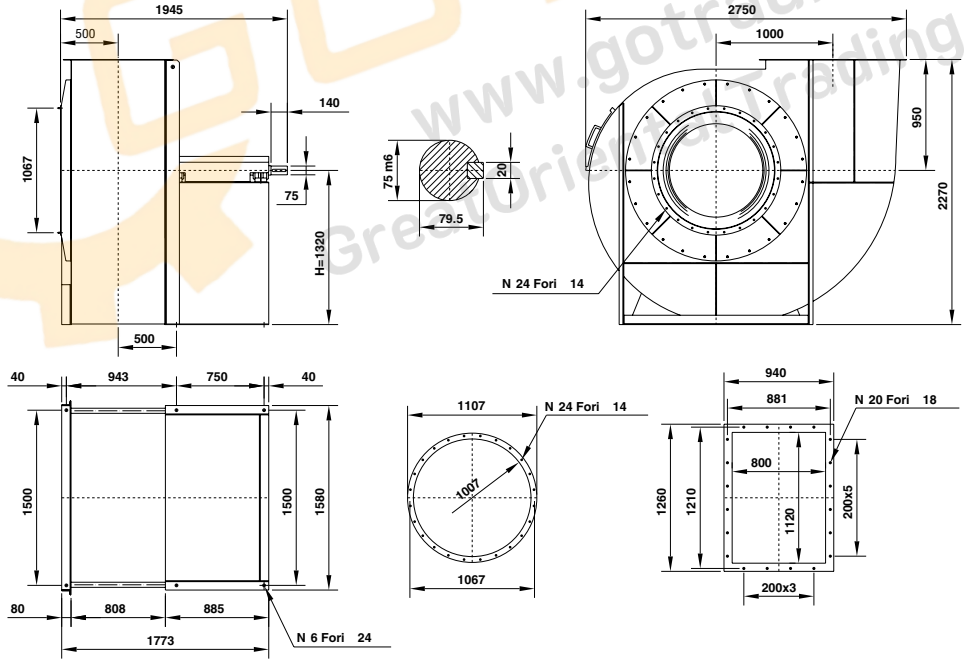

The fan is not revolvable

UNI ISO 13349 rules orientations (transmission side)

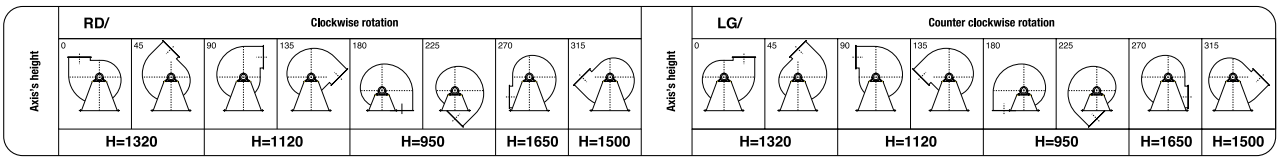

www.gotrading.co.th
Great Oriental Trading

SERIES MNb 1601 SPECIFICATIONS

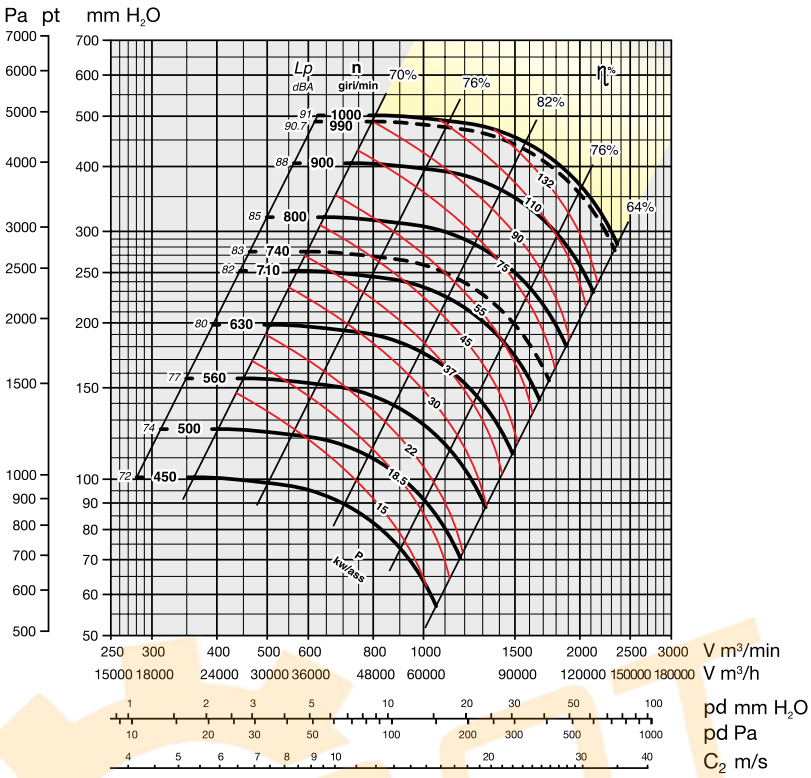

YELLOW ZONE - Consult technical office

Maximum admissible rounds:

<90°C = 1000 rounds/min.
90–200°C = 900 rounds/min.
200–350°C = 750 rounds/min.

Noise level tolerance + 3 dBA

KW consumed fan tolerance ± 3%

OVERALL DIMENSIONS in mm

PD^2 / GD^2 = 425 kgm²

Weight kg 1900

Support SNL 520

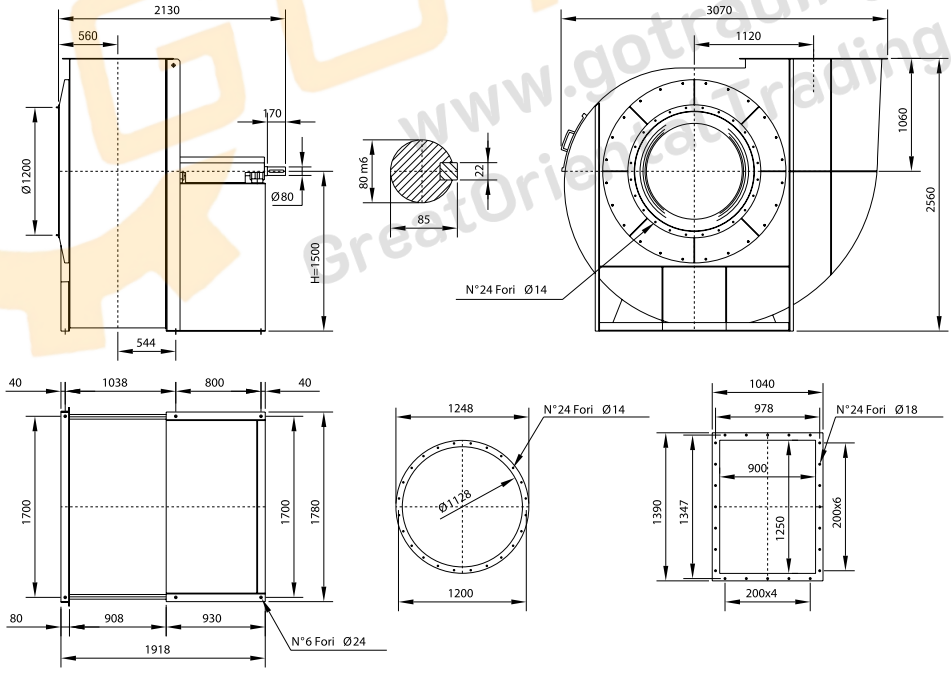

The fan is not revolvable

UNI ISO 13349 rules orientations (transmission side)

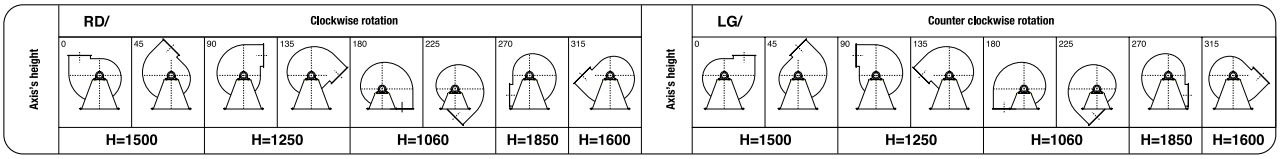

www.gotrading.co.th
GreatOrientalTrading

SERIES MNb 1801 SPECIFICATIONS

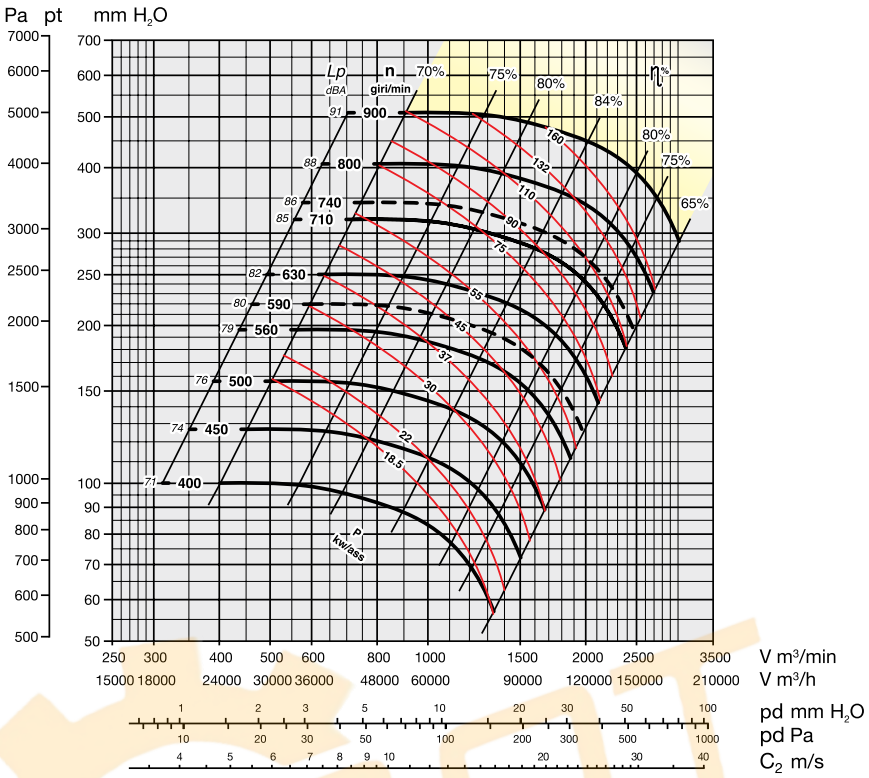

YELLOW ZONE - Consult technical office

Maximum admissible rounds:

<90°C = 900 rounds/min.
90–200°C = 750 rounds/min.
200–350°C = 650 rounds/min.

Noise level tolerance + 3 dBA

KW consumed fan tolerance ± 3%

OVERALL DIMENSIONS in mm

PD^2
GD^2 = 830 kgm²

Weight kg 2750

Support SNL 522

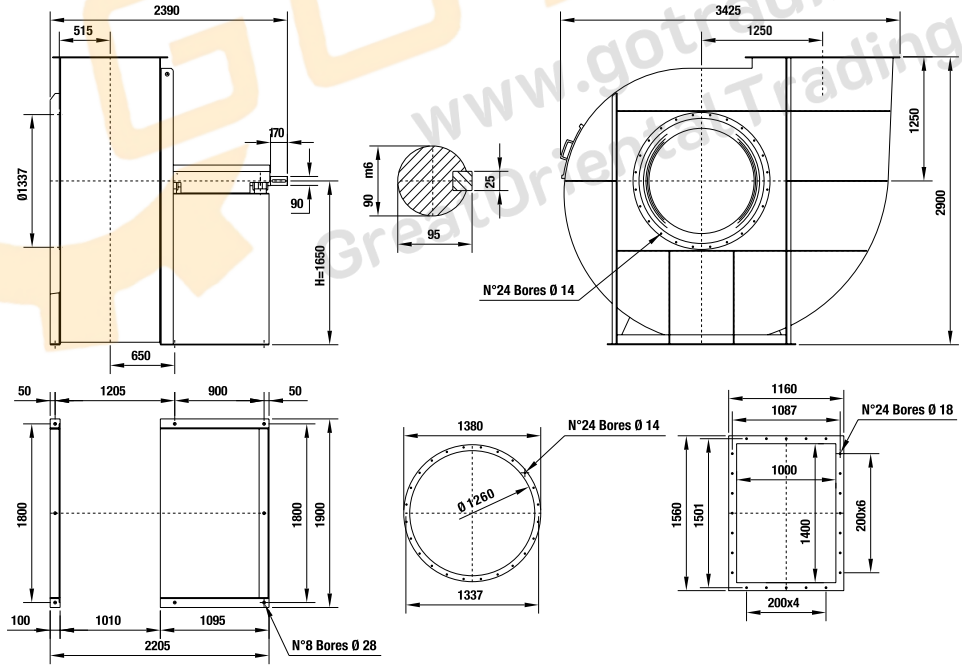

The fan is not revolvable

UNI ISO 13349 rules orientations (transmission side)

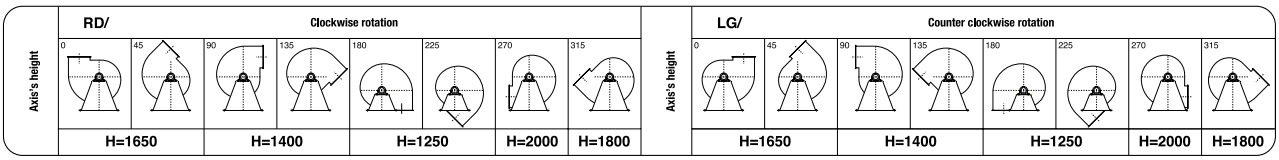

www.gotrading.co.th
Great Oriental Trading

SERIES MNb 2001 SPECIFICATIONS

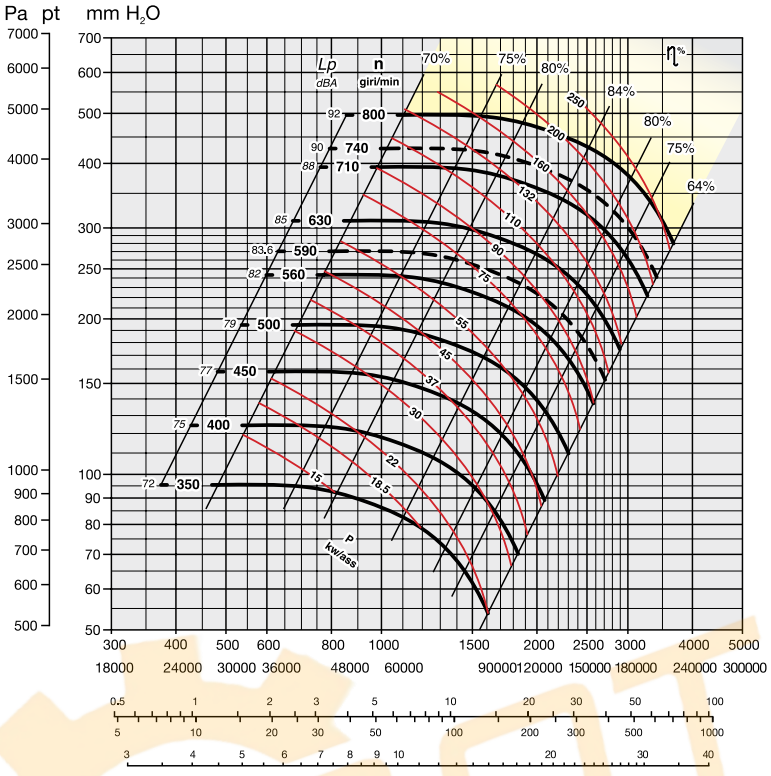

YELLOW ZONE - Consult technical office

Maximum admissible rounds:

<90°C = 800 rounds/min.
90–200°C = 650 rounds/min.
200–350°C = 560 rounds/min.

Noise level tolerance + 3 dBA

KW consumed fan tolerance ± 3%

OVERALL DIMENSIONS in mm

PD^2
GD^2 = 1300 kgm²

Weight kg 3350

Support SNL 524

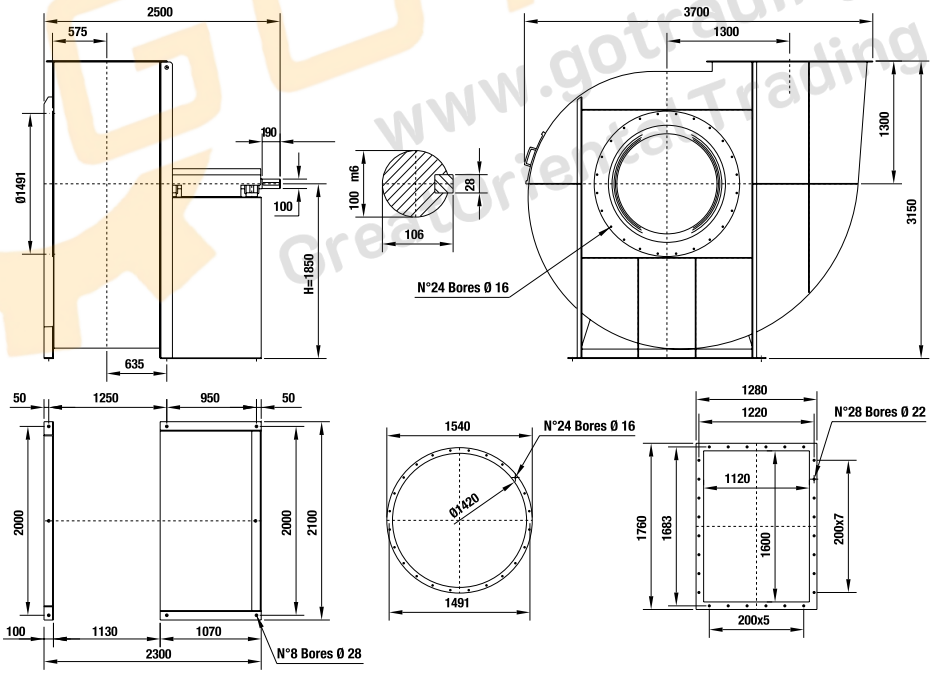

The fan is not revolvable

UNI ISO 13349 rules orientations (transmission side)

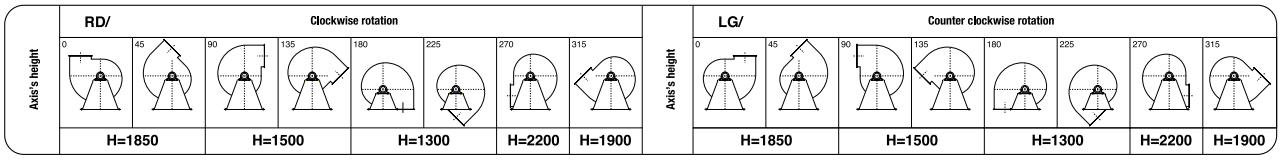

www.gotrading.co.th
Great Oriental Trading

Bedplate (Esec. 12)

MOTOR TYPE	Fino 4	5.5-15	18.5-30	37-55	75+
G	**500**	**670**	**750**	**980**	**1200**

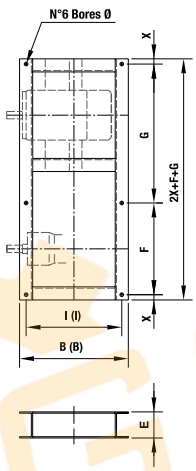

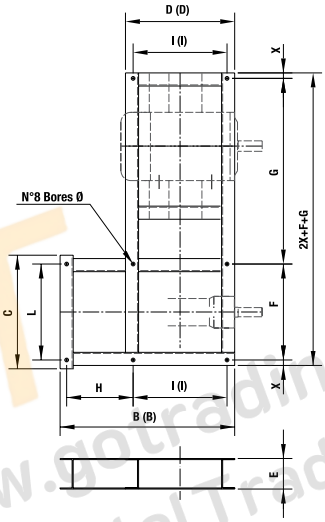

GOT
www.gotrading.co.th
GreatOrientalTrading

Dimensions

Series	mm													Weight
	B	(B)	C	D	(D)	E	F	X	H	I	(I)	L	Ø	kg
MNb 221	247	247	-	-	-	100	220	15	-	207	207	-	12	15
MNb 251	247	247	-	-	-	100	220	15	-	207	207	-	12	15
MNb 281	247	247	-	-	-	100	220	15	-	207	207	-	12	15
MNb 311	320	320	-	-	-	100	280	20	-	270	270	-	12	18
MNb 351	320	320	-	-	-	100	280	20	-	270	270	-	12	18
MNb 401	455	455	-	-	-	100	350	20	-	405	405	-	14	20
MNb 451	455	455	-	-	-	100	350	20	-	405	405	-	14	20
MNb 501	520	520	-	-	-	100	360	25	-	470	470	-	17	24
MNb 561	520	520	-	-	-	100	360	25	-	470	470	-	17	24
MNb 631	977	977	770	520	520	120	360	25	457	470	470	710	17	40
MNb 711	975	1015	910	490	530	120	800	25	490	430	470	800	17	45
MNb 801	1105	1165	990	555	615	140	870	30	550	495	555	870	17	75
MNb 901	1156	1216	1090	555	615	160	970	30	601	495	555	970	19	90
MNb 1001	1338	1338	1210	670	670	180	1060	35	668	600	600	1060	21	115
MNb 1121	1408	1408	1350	670	670	180	1200	35	738	600	600	1200	24	125
MNb 1251	1583	1583	1480	750	750	180	1320	40	833	670	670	1320	24	140
MNb 1401	1773	1773	1660	830	830	180	1500	40	943	750	750	1500	24	180
MNb 1601	1918	1918	1860	880	880	200	1700	40	1038	800	800	1700	28	225
MNb 1801	2205	2205	1900	1000	1000	220	2x900	50	1250	900	900	2x900	10x28	340
MNb 2001	2300	2300	2100	1050	1050	250	2x1000	50	1250	950	950	2x1000	10x28	405

(B) - (D) - (I) Fan with cooling fan

series MOb SPECIFICATIONS

USE:

the hight output centrifugal fans of this series are suitable for the suction of dusts, fumes, granulates, sawings or also wooden shavings of minimum sizes and materials in general mixed with air **excluding filament material.**

Their main feature is that of joining up the high output (deriving from the use of a fan wheel with reversed blades, special profile) with the suitability of transporting materials mixed with air Besides, these fans are distinguished by a very flat curve of the absorbed power, such as to not overload the motor neither when working with free throats.

They are assembled in carpenter shops, mechanical industries, cement factories, ceramic factories, tanneries, foundries, in the molinary and chemical industries, and in all those applications where it is necessary to transport harmful air with max. temperature of 90°C.

For temperatures of the transported fluid higher than 90°C up to 350°C a small heat stopping fan is splined to the shaft between support and scroll; besides the fan is painted with a special aluminium paint suitable for high temperatures.

Operating range

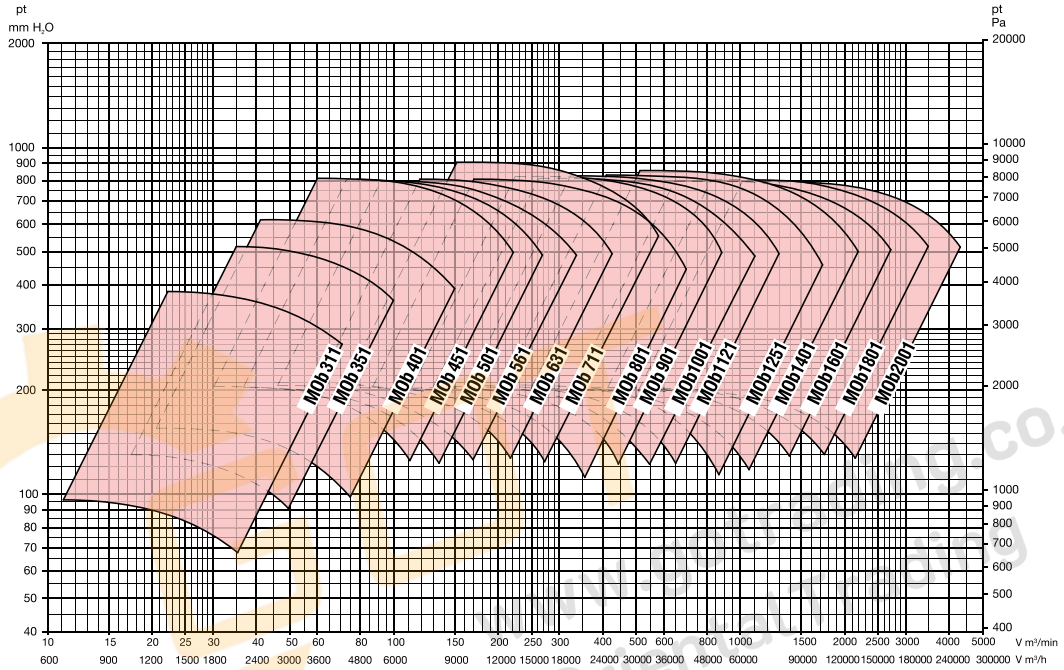

SERIES MOb 311 SPECIFICATIONS

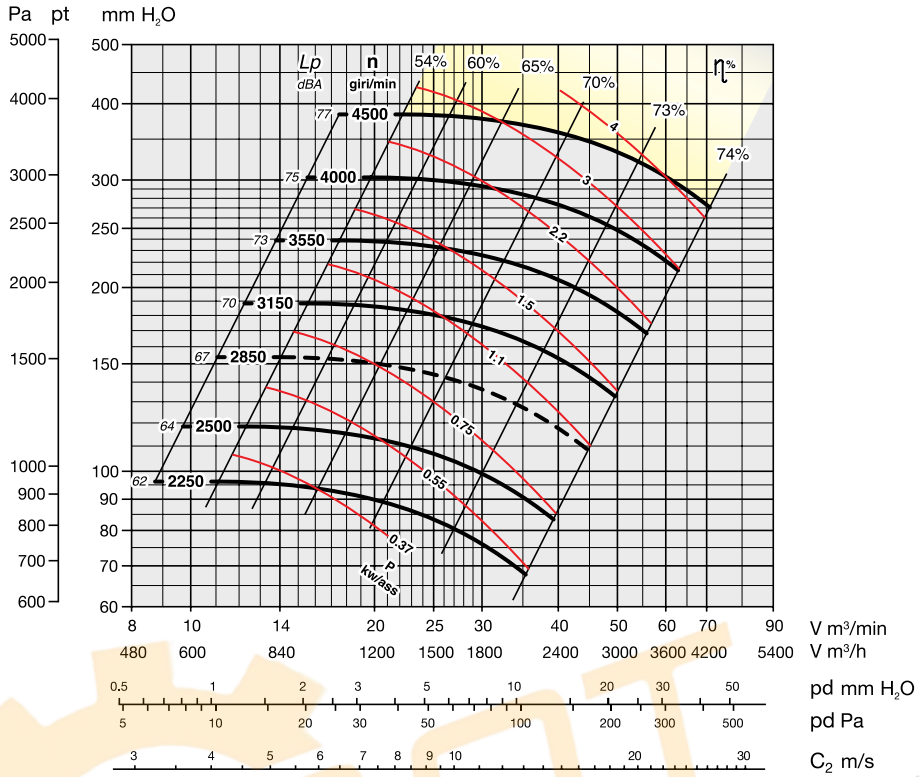

YELLOW ZONE - Consult technical office

Maximum admissible rounds:

<90°C = 4500 rounds/min.
90–200°C = 4000 rounds/min.
200–350°C = 3450 rounds/min.

Noise level tolerance + 3 dBA

KW consumed fan tolerance ± 3%

OVERALL DIMENSIONS in mm

Fan with cooling fan

PD^2
GD^2 = 0,20 kgm^2

Weight kg 37

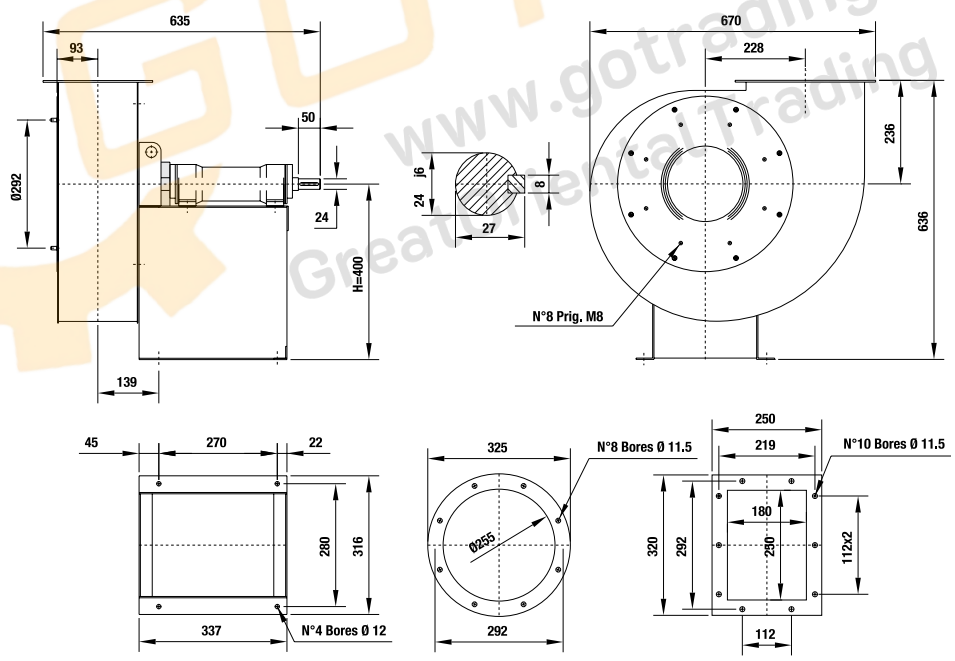

The fan is revolvable

UNI ISO 13349 rules orientations (transmission side)

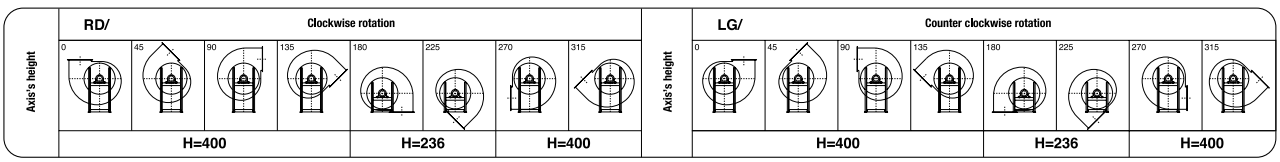

www.gotrading.co.th
Great Industrial Trading

SERIES MOb 351 SPECIFICATIONS

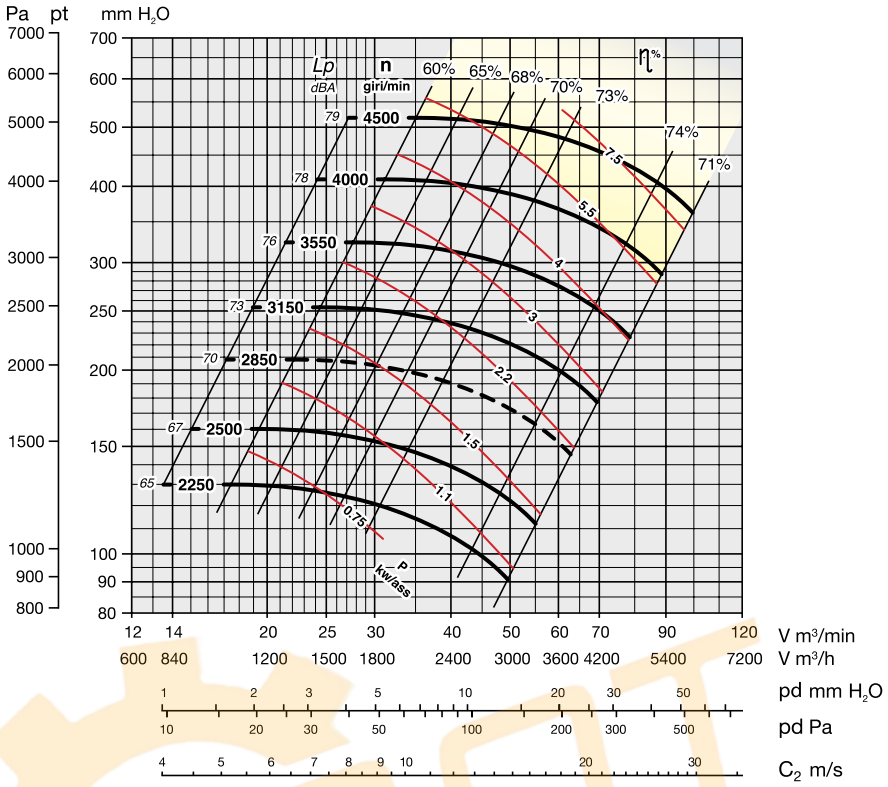

YELLOW ZONE - Consult technical office

Maximum admissible rounds:

<90°C = 4500 rounds/min.
90–200°C = 3750 rounds/min.
200–350°C = 3350 rounds/min.

Noise level tolerance + 3 dBA

KW consumed fan tolerance ± 3%

OVERALL DIMENSIONS in mm

Fan with cooling fan

PD^2
GD^2 = 0,38 kgm^2

Weight kg 59

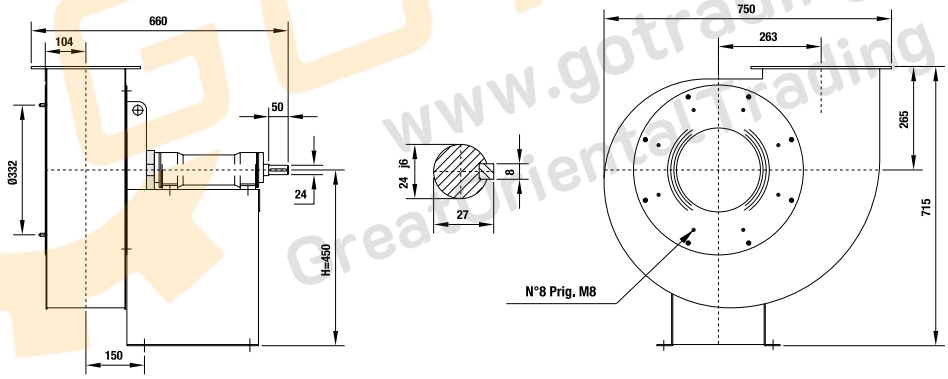

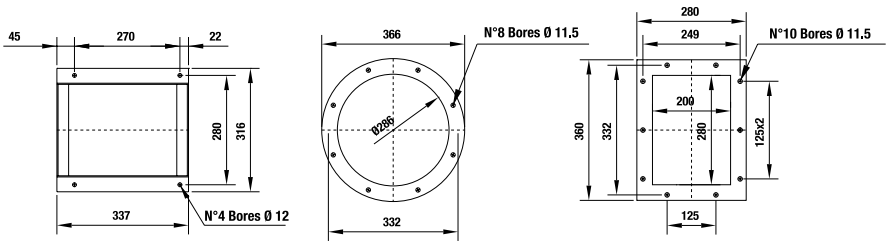

The fan is revolvable

UNI ISO 13349 rules orientations (transmission side)

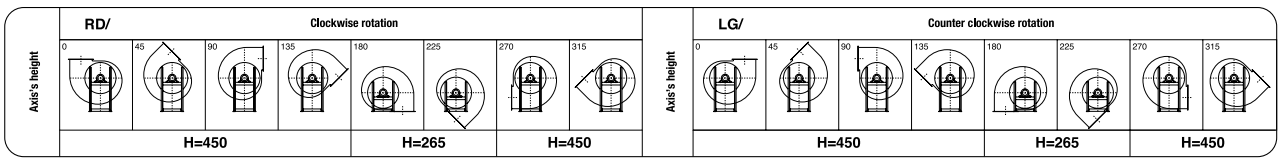

www.gotrading.co.th
Great Oriental Trading

SERIES MOb 401 SPECIFICATIONS

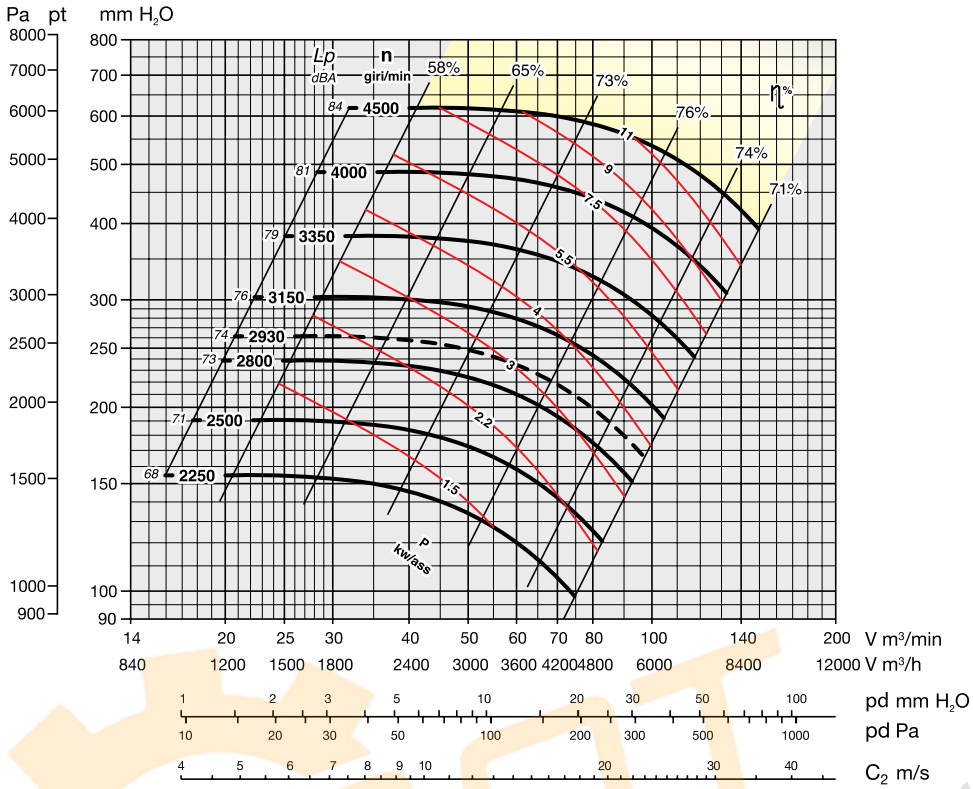

YELLOW ZONE - Consult technical office

Maximum admissible rounds:

<90°C = 4500 rounds/min.
90–200°C = 3700 rounds/min.
200–350°C = 3300 rounds/min.

Noise level tolerance + 3 dBA

KW consumed fan tolerance ± 3%

OVERALL DIMENSIONS in mm

Fan with cooling fan

PD^2
GD^2 = 0,6 kgm²

Weight kg 76

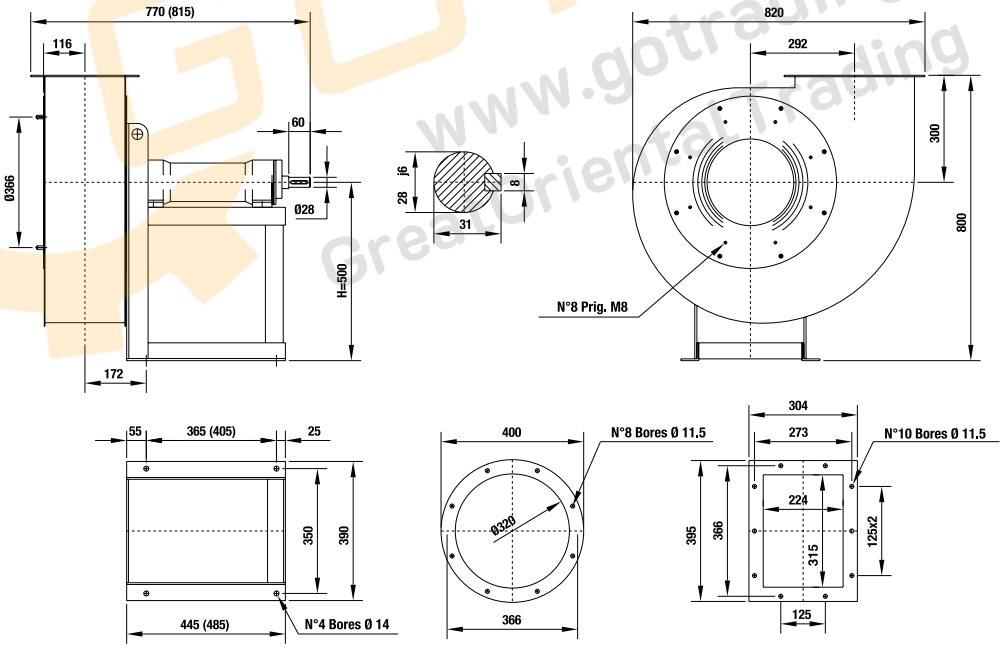

The fan is revolvable

UNI ISO 13349 rules orientations (transmission side)

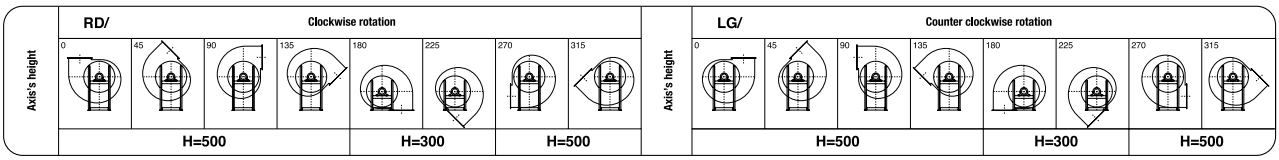

www.gotrading.co.th
Great Oriental Trading

SERIES MOb 451 SPECIFICATIONS

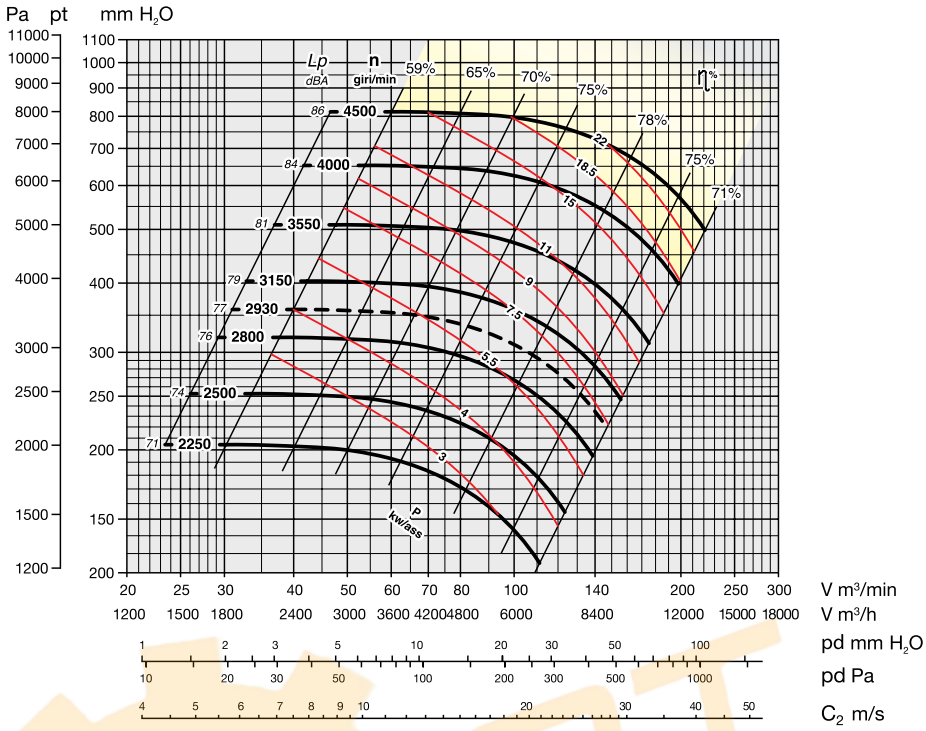

YELLOW ZONE - Consult technical office

Maximum admissible rounds:

<90°C = 4500 rounds/min.
90–200°C = 3550 rounds/min.
200–350°C = 3150 rounds/min.

Noise level tolerance + 3 dBA

KW consumed fan tolerance ± 3%

N.B.: For constructive reasons, the fans from size 451÷501 follow an orientation with angles of 30°instead of 45°. Therefore, when you place an order, you must clearly indicate if 45° are required.

OVERALL DIMENSIONS in mm

Fan with cooling fan

PD^2 / GD^2 = 1 kgm²

Weight kg 90

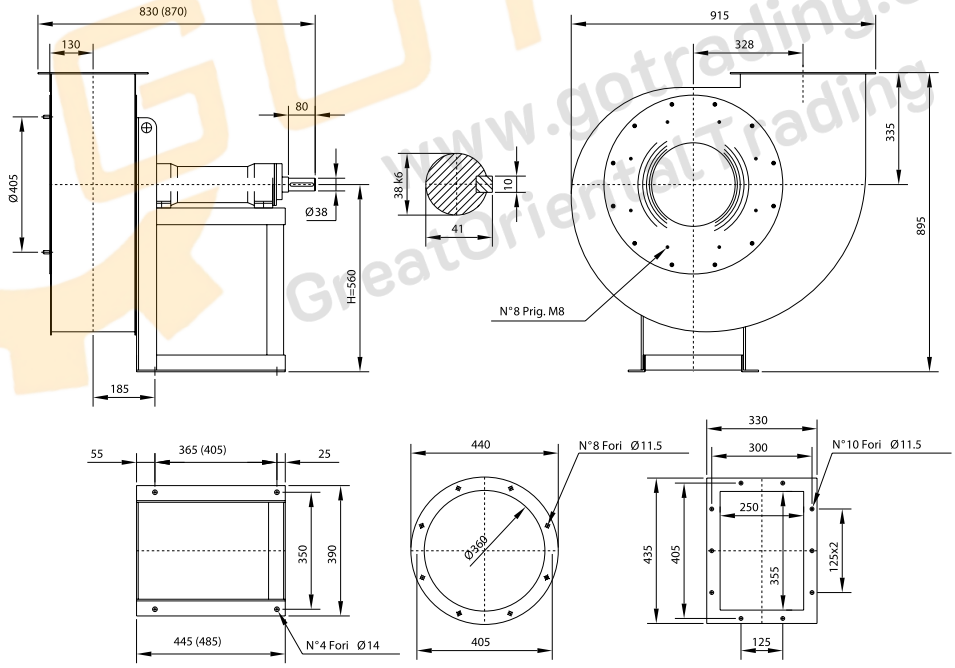

The fan is revolvable

UNI ISO 13349 rules orientations (transmission side)

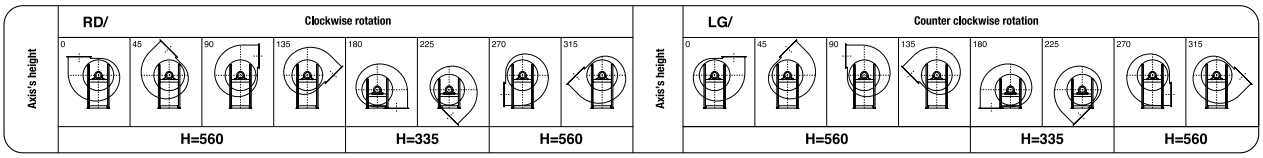

www.gotrading.co.th
GreatOrientalTrading

SERIES MOb 501 SPECIFICATIONS

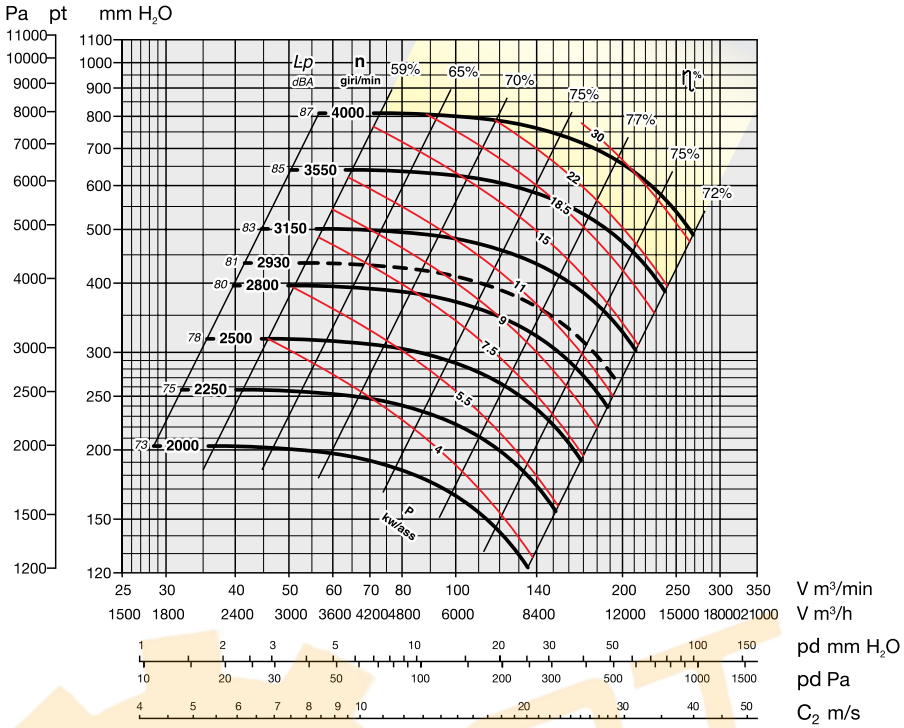

YELLOW ZONE - Consult technical office

Maximum admissible rounds:

<90°C = 4000 rounds/min.
90–200°C = 3450 rounds/min.
200–350°C = 3000 rounds/min.

Noise level tolerance + 3 dBA

KW consumed fan tolerance ± 3%

N.B.: For constructive reasons, the fans from size 451÷501 follow an orientation with angles of 30°instead of 45°. Therefore, when you place an order, you must clearly indicate if 45° are required.

OVERALL DIMENSIONS in mm

Fan with cooling fan

PD^2 / GD^2 = 1,7 kgm²

Weight kg 125

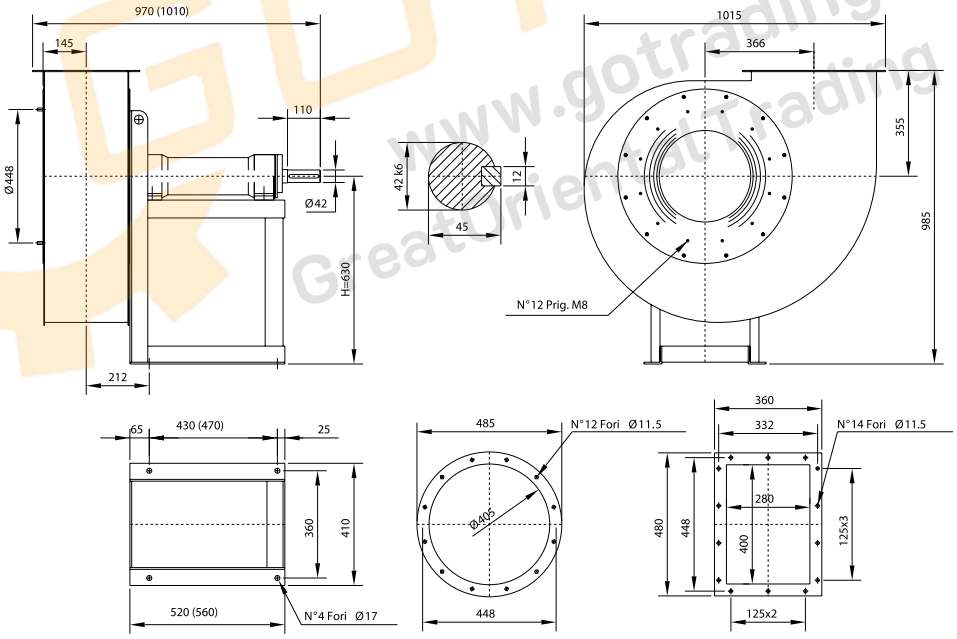

The fan is revolvable

UNI ISO 13349 rules orientations (transmission side)

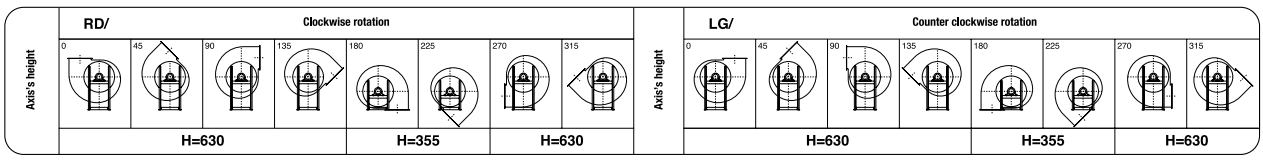

www.gotrading.co.th
Great Internet Trading

SERIES MOb 561 SPECIFICATIONS

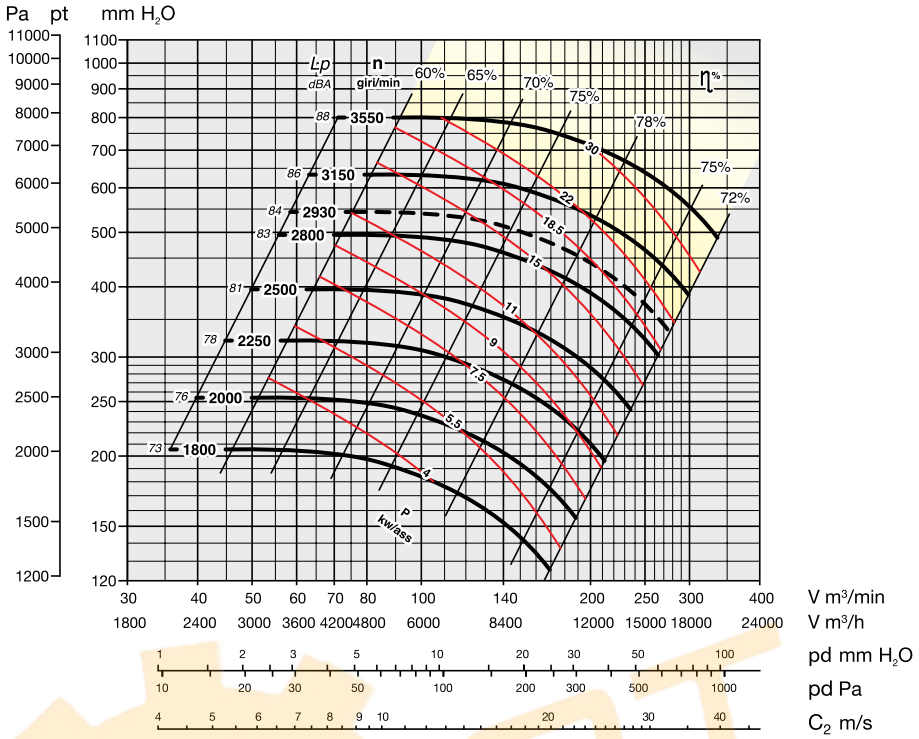

YELLOW ZONE - Consult technical office

Maximum admissible rounds:

<90°C = 3550 rounds/min.
90–200°C = 3050 rounds/min.
200–350°C = 2700 rounds/min.

Noise level tolerance + 3 dBA

KW consumed fan tolerance ± 3%

OVERALL DIMENSIONS in mm

Fan with cooling fan

PD^2
GD^2 = 3,4 kgm²

Weight kg 150

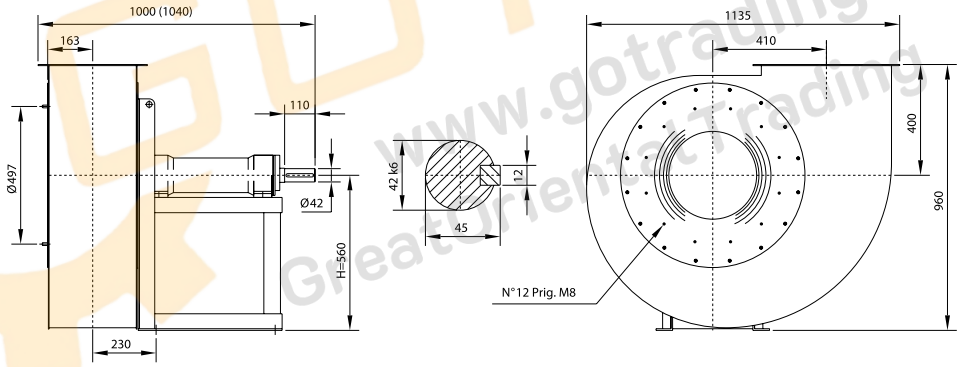

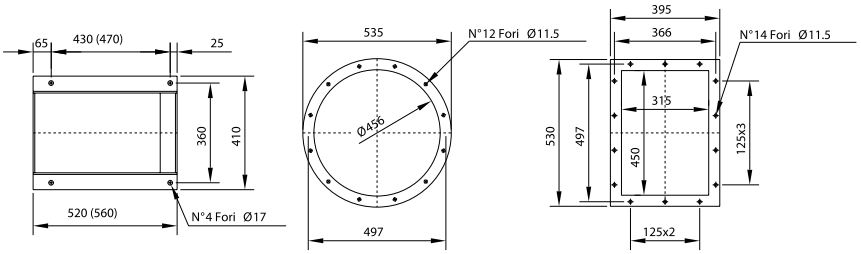

The fan is revolvable

UNI ISO 13349 rules orientations (transmission side)

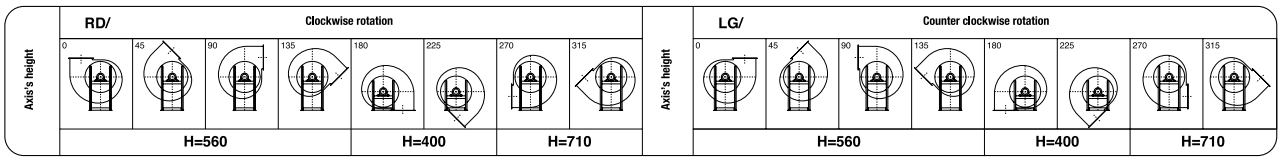

www.gotrading.co.th
Great Orient Trading

SERIES MOb 631 SPECIFICATIONS

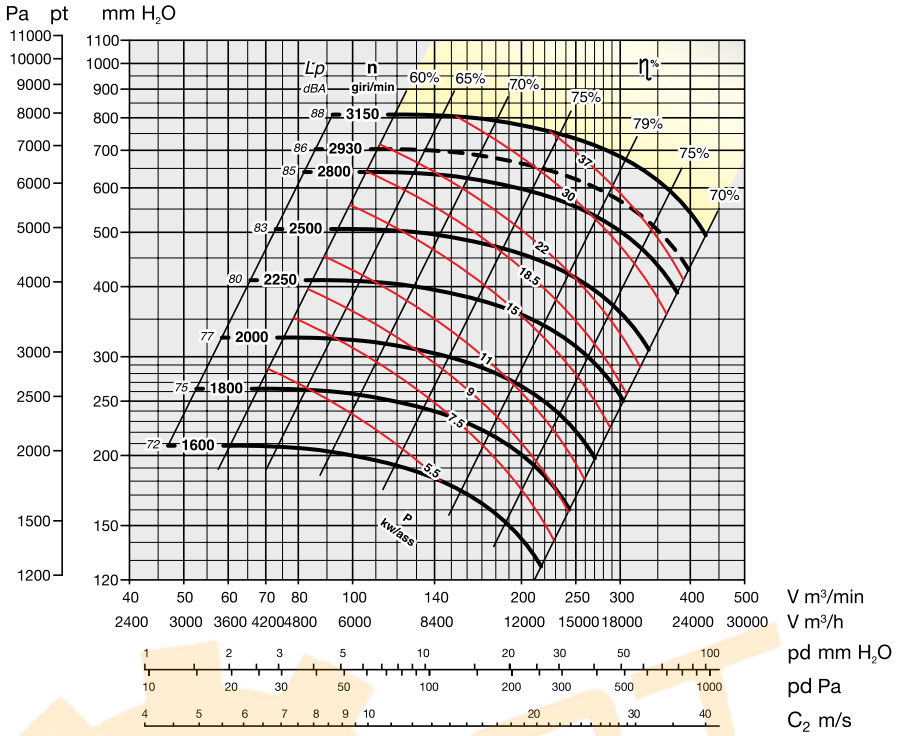

YELLOW ZONE - Consult technical office

Maximum admissible rounds:

<90°C = 3150 rounds/min.
90–200°C = 2800 rounds/min.
200–350°C = 2400 rounds/min.

Noise level tolerance + 3 dBA

KW consumed fan tolerance ± 3%

OVERALL DIMENSIONS in mm

Fan with cooling fan

PD^2
GD^2 = 5,5 kgm²

Weight kg 215

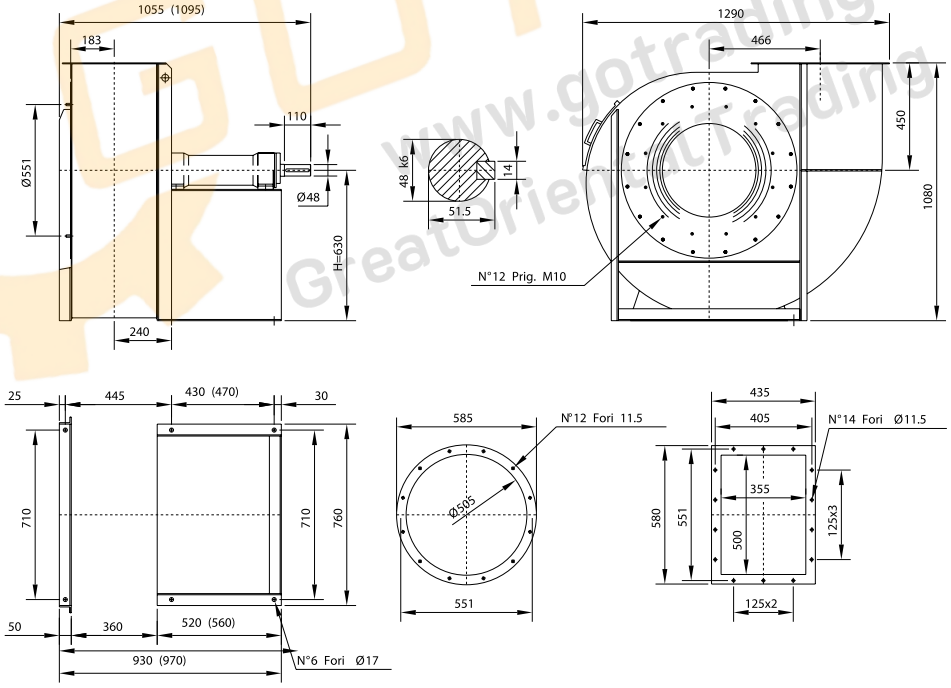

The fan is revolvable

UNI ISO 13349 rules orientations (transmission side)

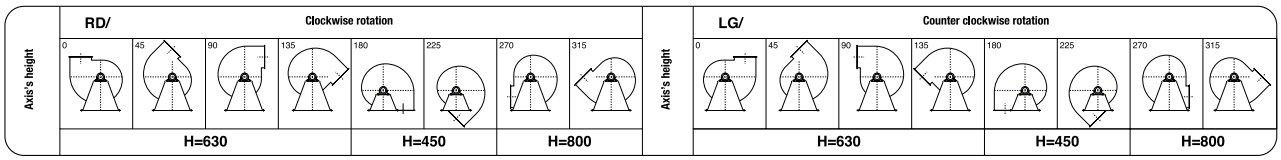

www.gotrading.co.th
GreatOrientTrading

SERIES MOb 711 SPECIFICATIONS

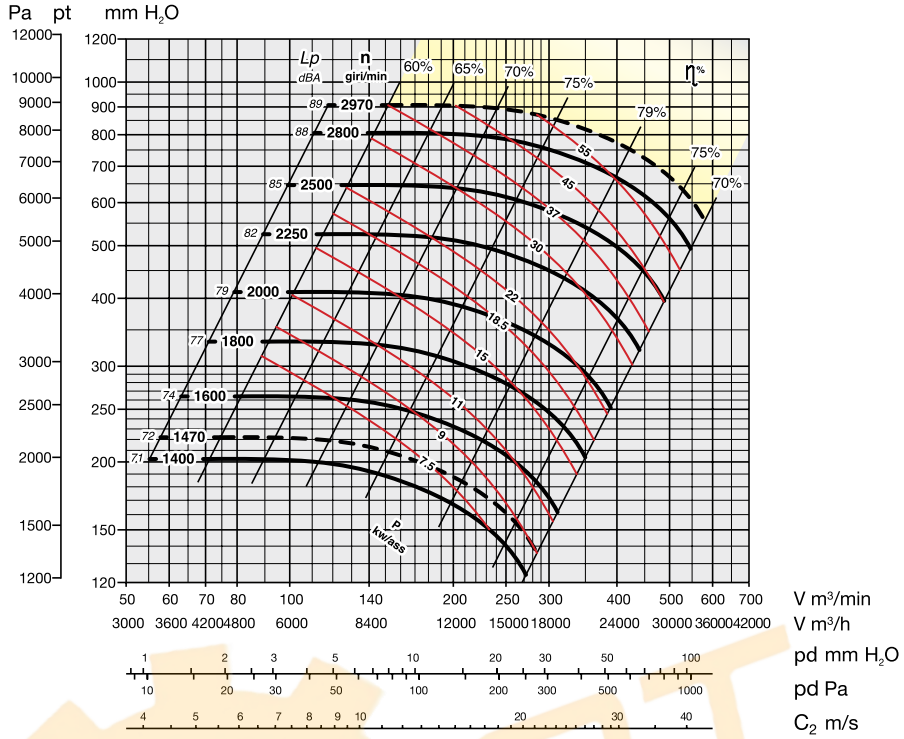

YELLOW ZONE - Consult technical office

Maximum admissible rounds:

<90°C = 2970 rounds/min.
90–200°C = 2500 rounds/min.
200–350°C = 2250 rounds/min.

Noise level tolerance + 3 dBA

KW consumed fan tolerance ± 3%

OVERALL DIMENSIONS in mm

Fan with cooling fan

PD^2
GD^2 = 9,5 kgm²

Weight kg 270

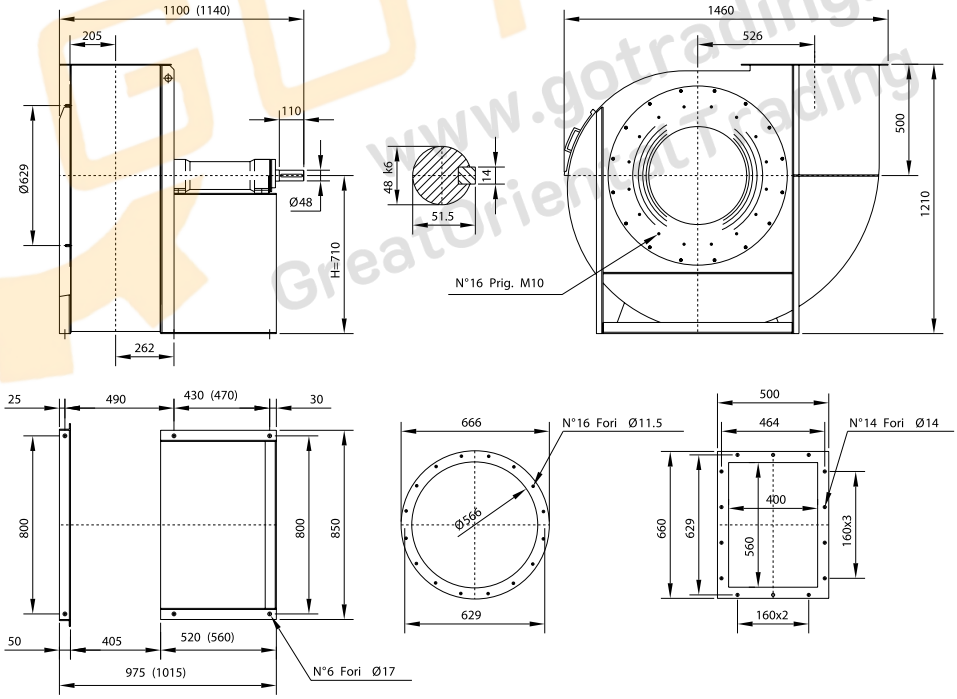

The fan is not revolvable

UNI ISO 13349 rules orientations (transmission side)

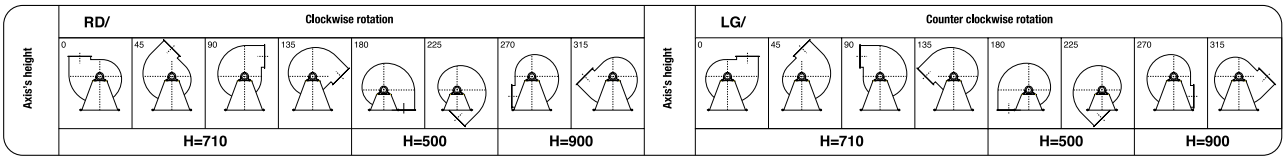

www.gotrading.co.th
GreatOrientTrading

SERIES MOb 801 SPECIFICATIONS

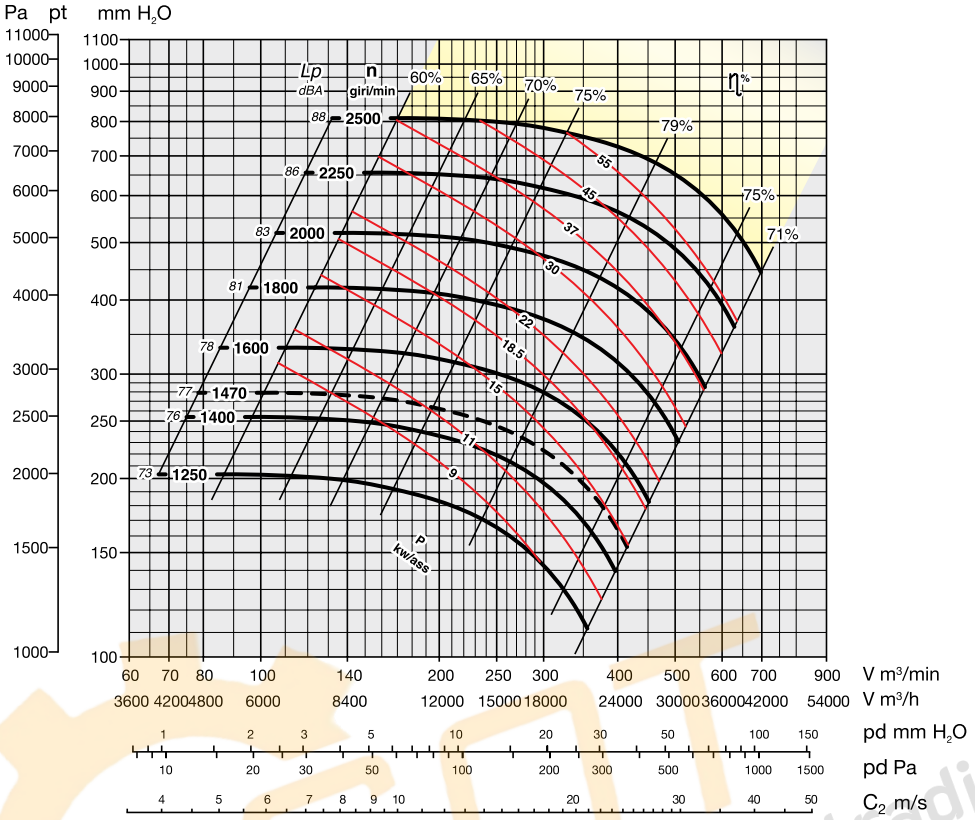

YELLOW ZONE - Consult technical office

Maximum admissible rounds:

<90°C = 2500 rounds/min.
90–200°C = 2250 rounds/min.
200–350°C = 1900 rounds/min.

Noise level tolerance + 3 dBA

KW consumed fan tolerance ± 3%

OVERALL DIMENSIONS in mm

Fan with cooling fan

PD^2
GD^2 = 16 kgm²

Weight kg 365

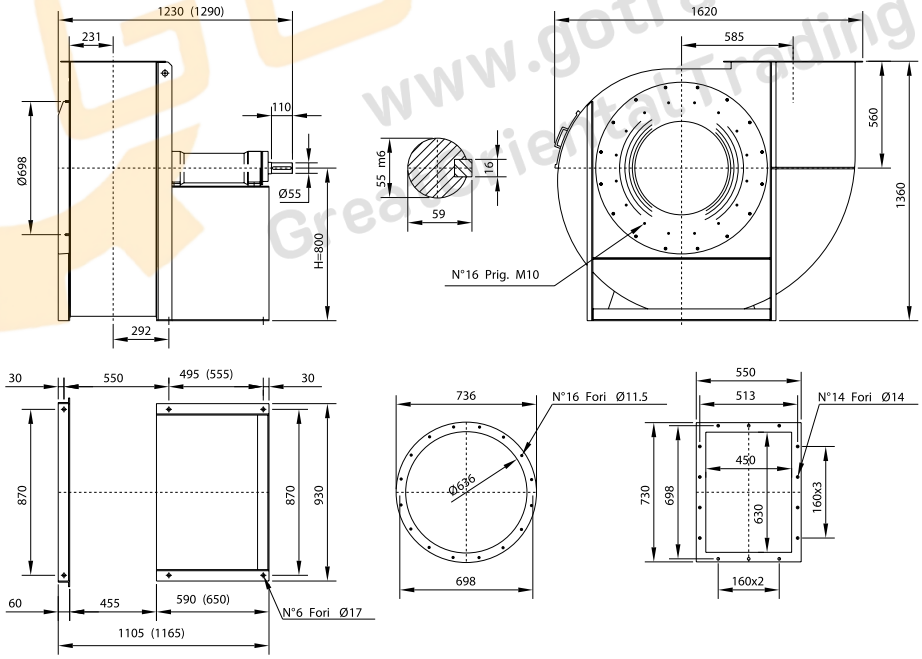

The fan is not revolvable

UNI ISO 13349 rules orientations (transmission side)

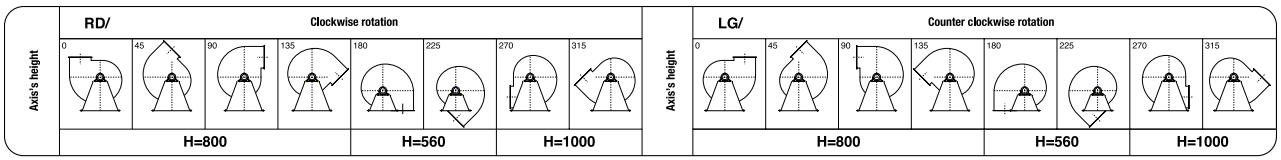

www.gotrading.co.th
Great Oriental Trading

SERIES MOb 901 SPECIFICATIONS

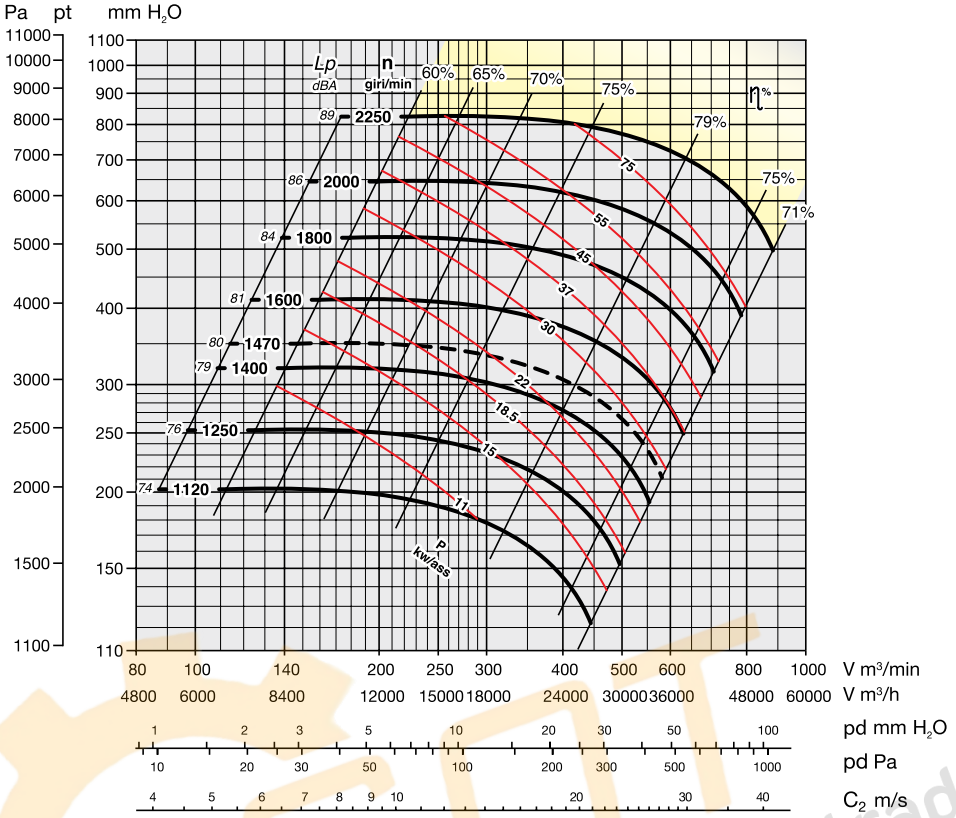

YELLOW ZONE - Consult technical office

Maximum admissible rounds:

<90°C = 2250 rounds/min.
90–200°C = 2000 rounds/min.
200–350°C = 1800 rounds/min.

Noise level tolerance + 3 dBA

KW consumed fan tolerance ± 3%

OVERALL DIMENSIONS in mm

Fan with cooling fan

PD^2
GD^2 = 34 kgm^2

Weight kg 440

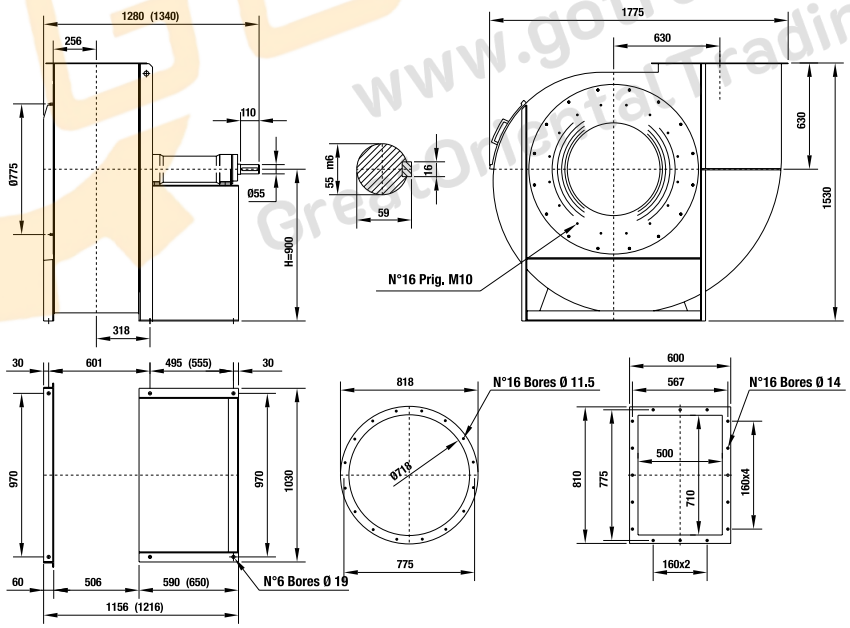

The fan is not revolvable

UNI ISO 13349 rules orientations (transmission side)

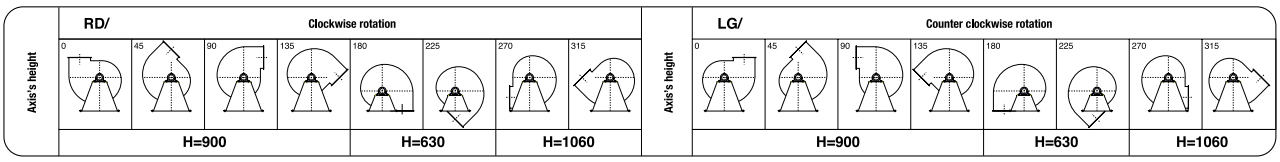

www.gotrading.co.th
Great Oriental Trading

SERIES MOb 1001 SPECIFICATIONS

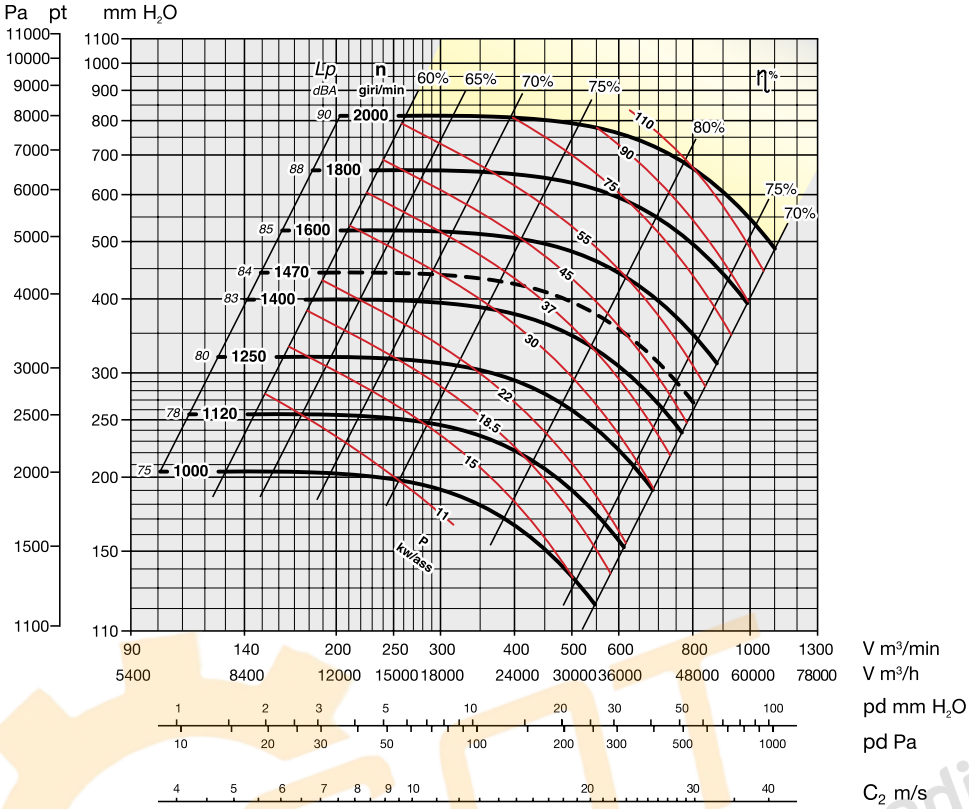

YELLOW ZONE - Consult technical office

Maximum admissible rounds:

<90°C = 2000 rounds/min.
90–200°C = 1800 rounds/min.
200–350°C = 1600 rounds/min.

Noise level tolerance + 3 dBA

KW consumed fan tolerance ± 3%

OVERALL DIMENSIONS in mm

Fan with cooling fan

PD^2 / GD^2 = 50 kgm²

Weight kg 595

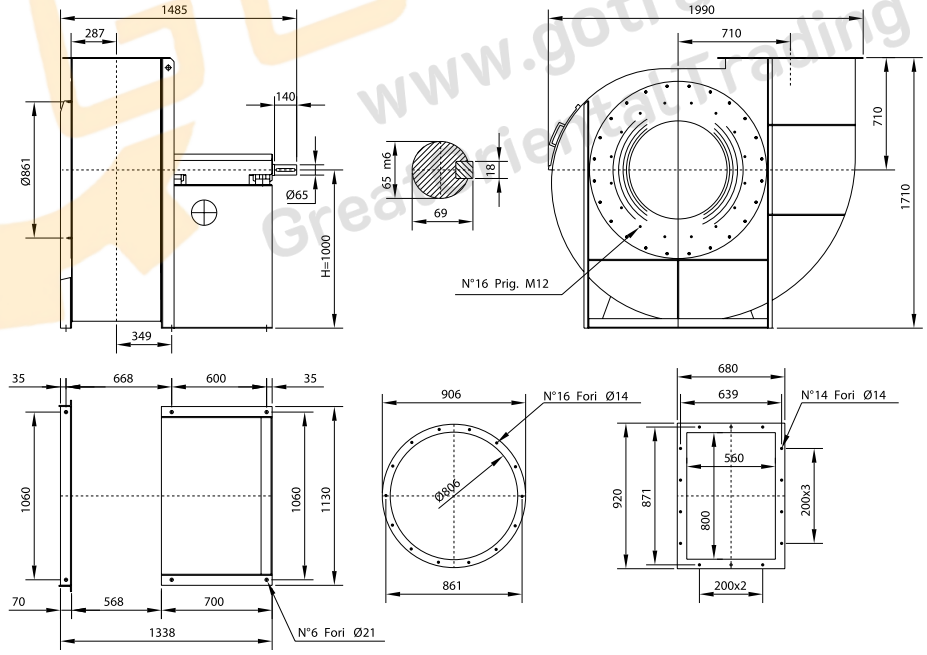

The fan is not revolvable

UNI ISO 13349 rules orientations (transmission side)

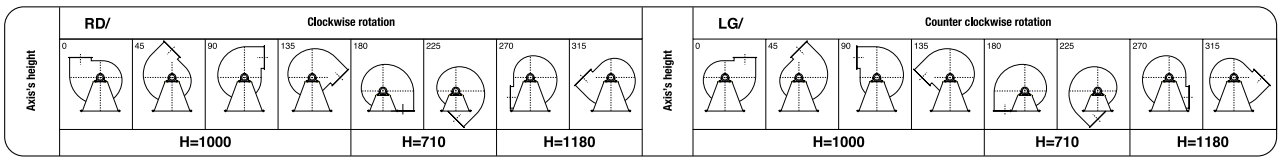

www.gotrading.co.th
Great Quality Trading

SERIES MOb 1121 SPECIFICATIONS

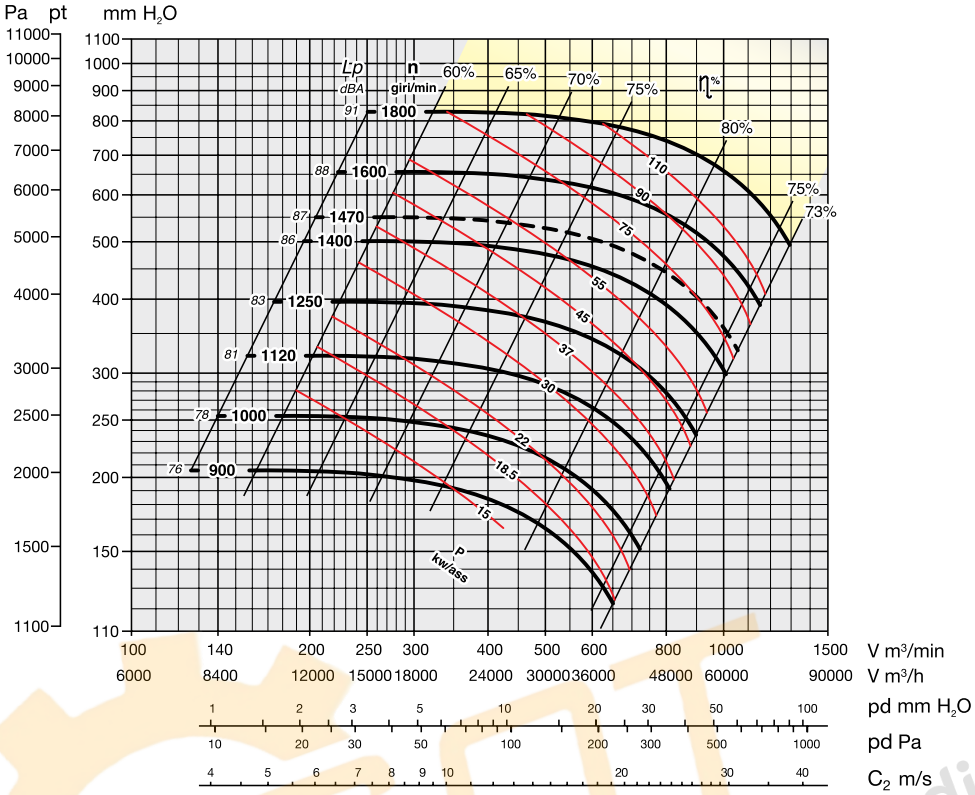

YELLOW ZONE - Consult technical office

Maximum admissible rounds:

<90°C = 1800 rounds/min.
90–200°C = 1600 rounds/min.
200–350°C = 1400 rounds/min.

Noise level tolerance + 3 dBA

KW consumed fan tolerance ± 3%

OVERALL DIMENSIONS in mm

Fan with cooling fan

PD^2
GD^2 = 76 kgm^2

Weight kg 770

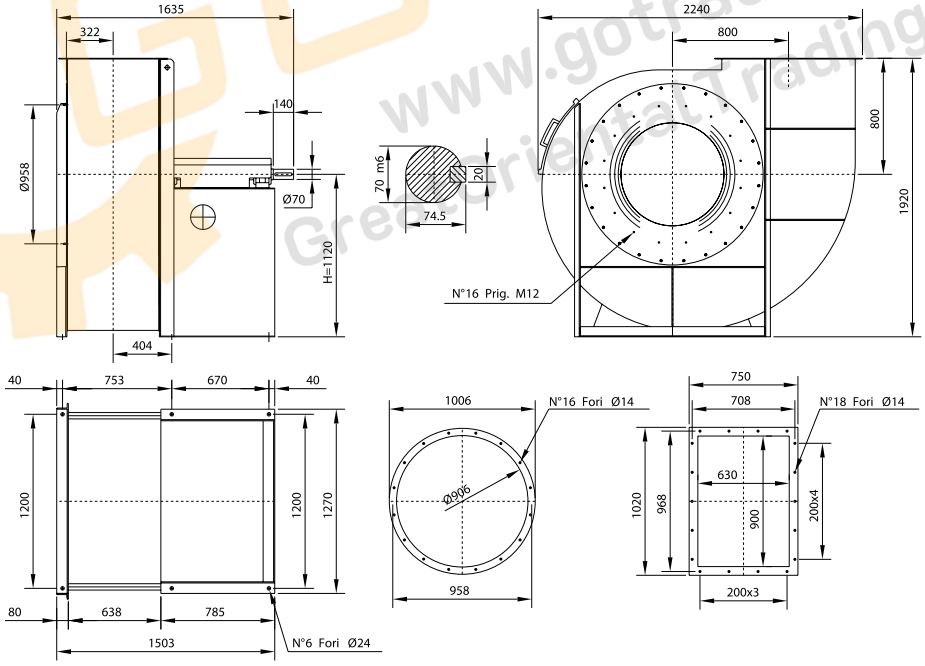

The fan is not revolvable

UNI ISO 13349 rules orientations (transmission side)

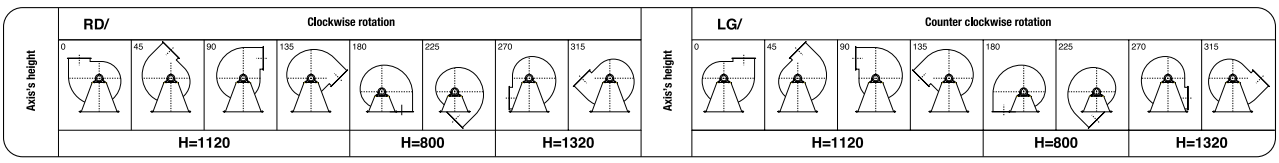

www.gotrading.co.th
Greenfield Trading

SERIES MOb 1251 SPECIFICATIONS

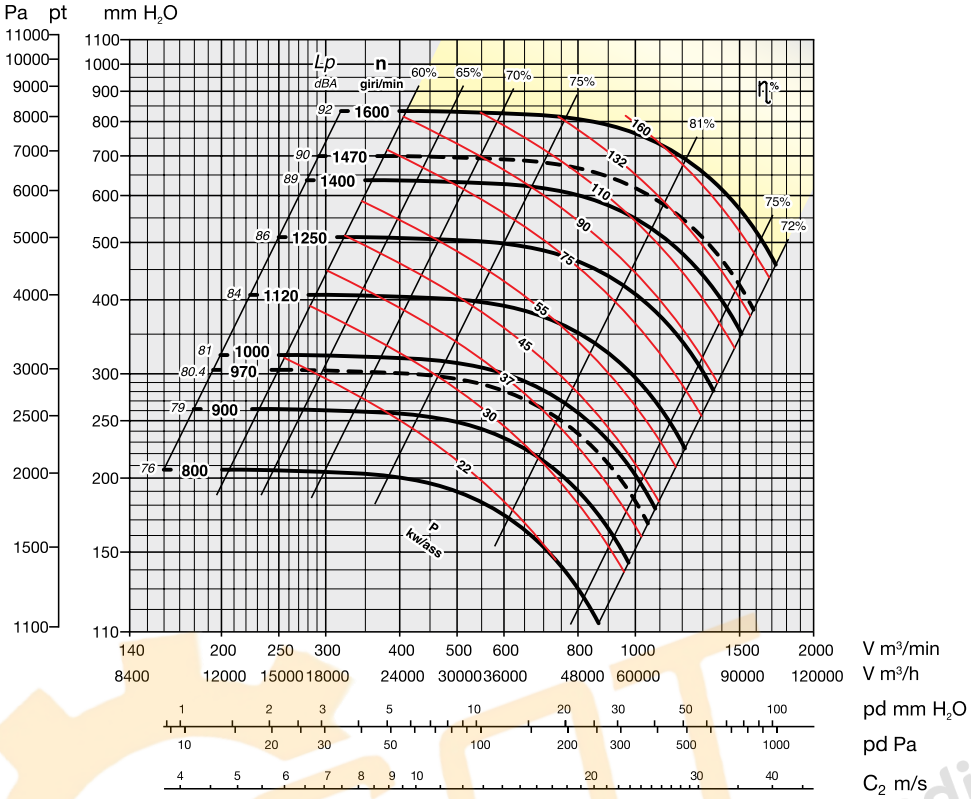

YELLOW ZONE - Consult technical office

Maximum admissible rounds:

<90°C = 1600 rounds/min.
90–200°C = 1400 rounds/min.
200–350°C = 1250 rounds/min.

Noise level tolerance + 3 dBA

KW consumed fan tolerance ± 3%

OVERALL DIMENSIONS in mm

PD^2
GD^2 = 125 kgm²

Weight kg 1030

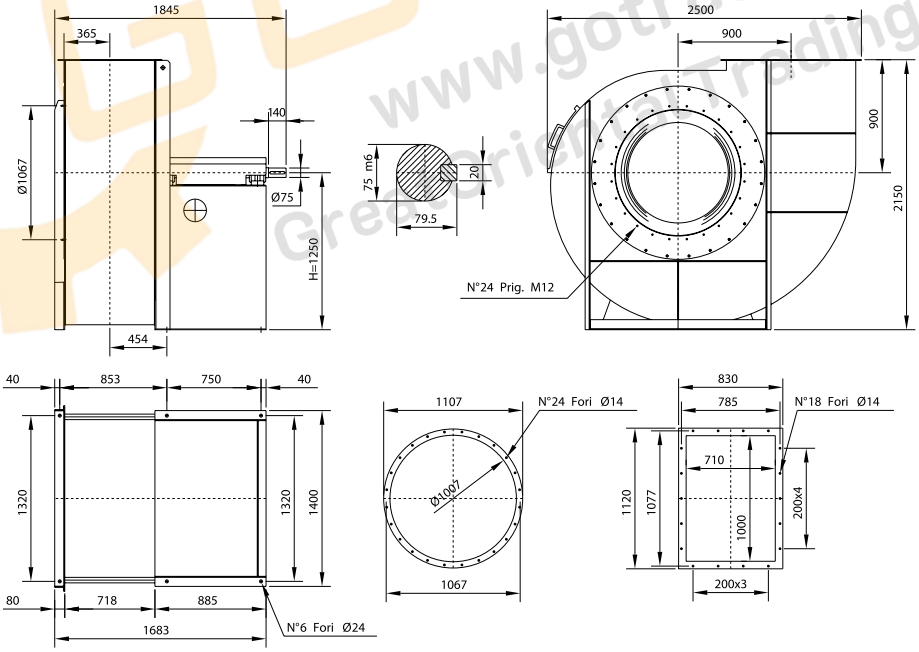

The fan is not revolvable

UNI ISO 13349 rules orientations (transmission side)

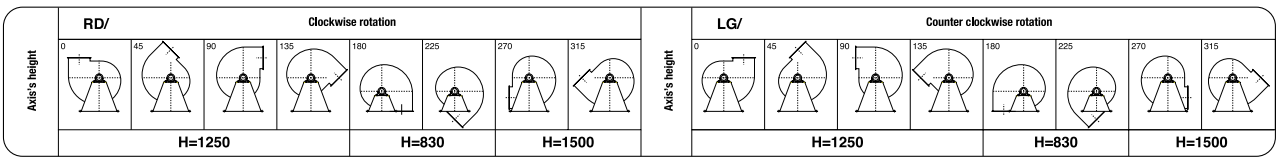

www.gotrading.co.th
Great Quality Trading

SERIES MOb 1401 SPECIFICATIONS

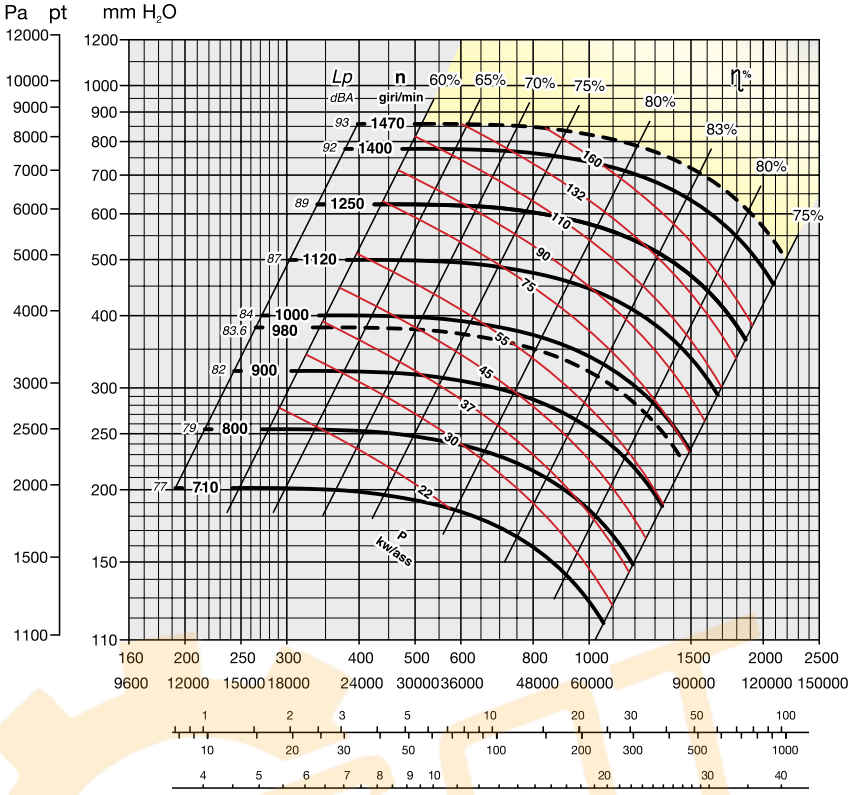

YELLOW ZONE - Consult technical office

Maximum admissible rounds:

<90°C = 1470 rounds/min.
90–200°C = 1250 rounds/min.
200–350°C = 1120 rounds/min.

Noise level tolerance + 3 dBA

KW consumed fan tolerance ± 3%

OVERALL DIMENSIONS in mm

PD^2
GD^2 = 225 kgm²

Weight kg 1350

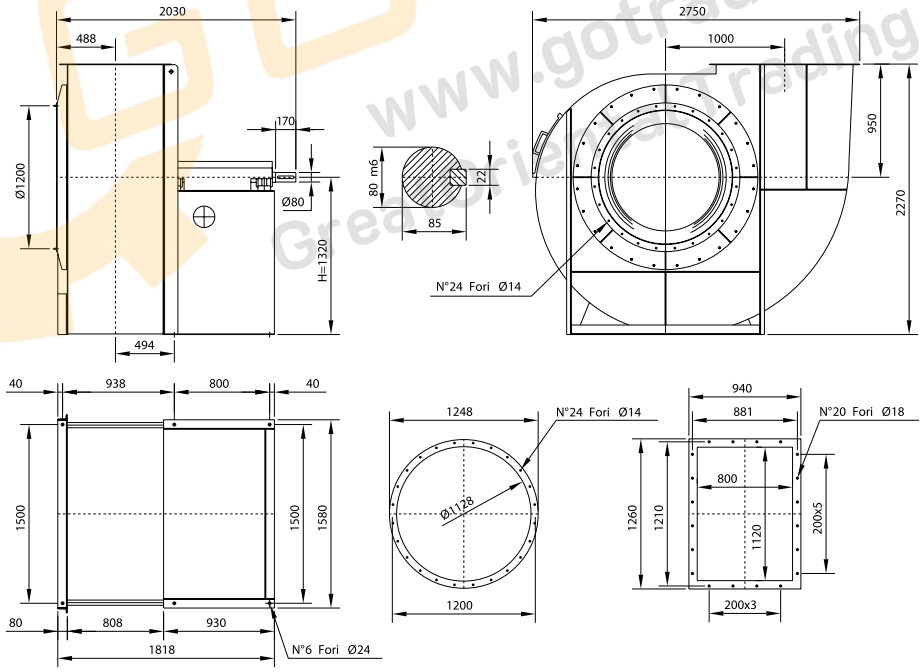

The fan is not revolvable

UNI ISO 13349 rules orientations (transmission side)

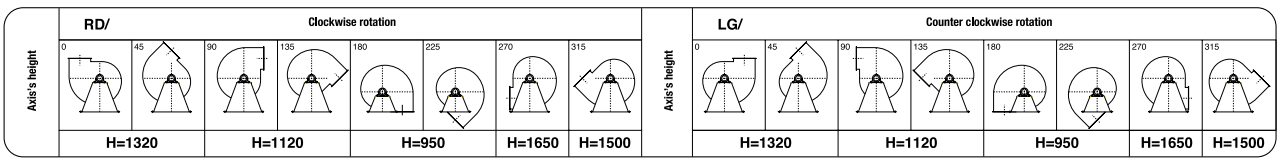

www.gotrading.co.th
Great Industrial Trading

SERIES MOb 1601 SPECIFICATIONS

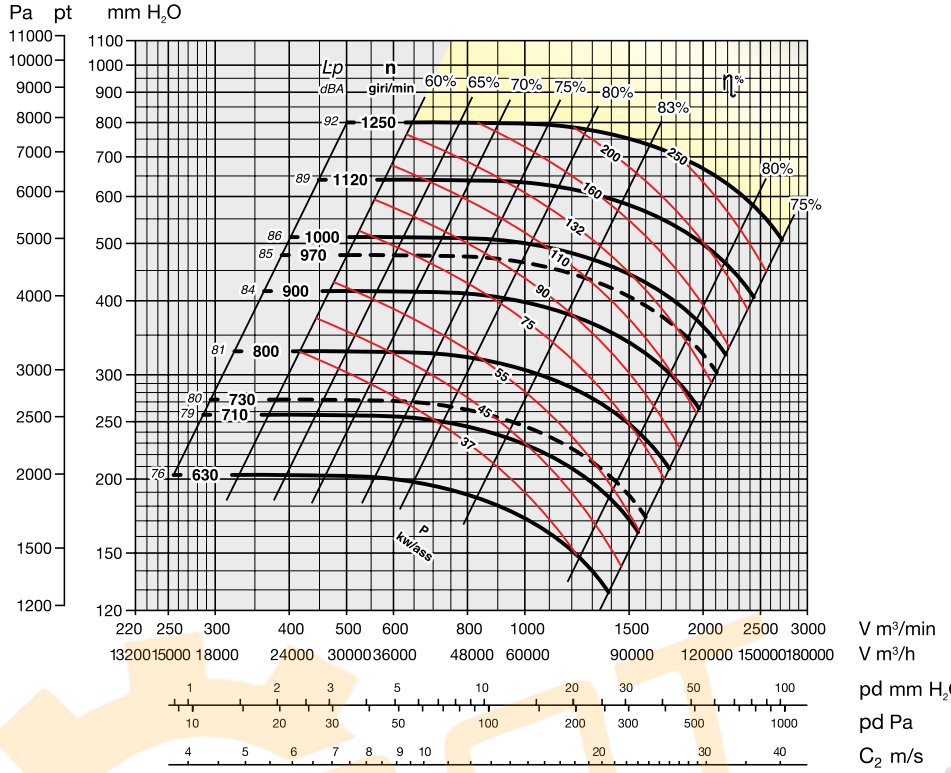

YELLOW ZONE - Consult technical office

Maximum admissible rounds:

<90°C = 1250 rounds/min.
90–200°C = 1120 rounds/min.
200–350°C = 1000 rounds/min.

Noise level tolerance + 3 dBA

KW consumed fan tolerance ± 3%

OVERALL DIMENSIONS in mm

PD^2
GD^2 = 380 kgm²

Weight kg 1700

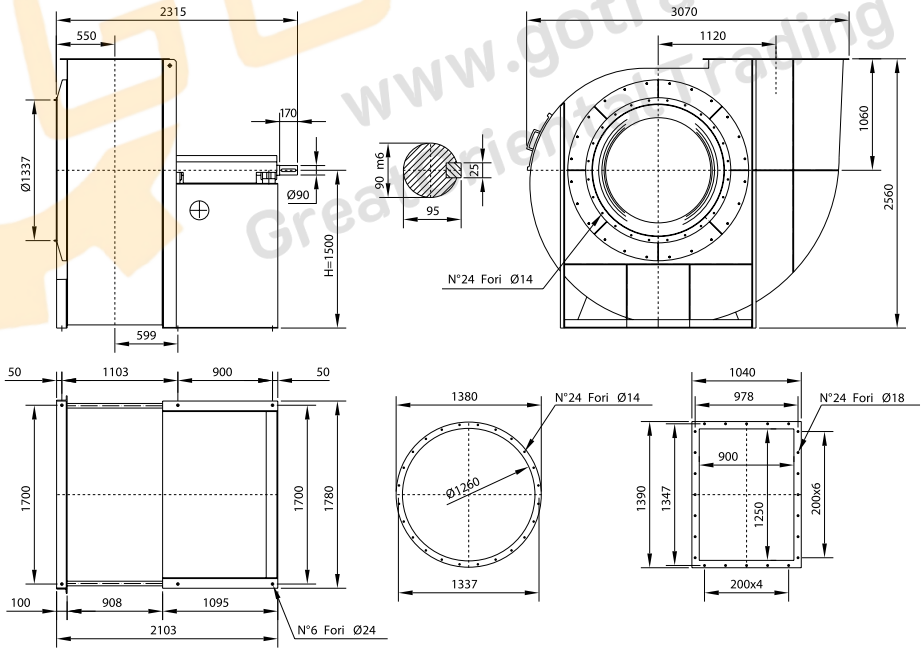

The fan is not revolvable

UNI ISO 13349 rules orientations (transmission side)

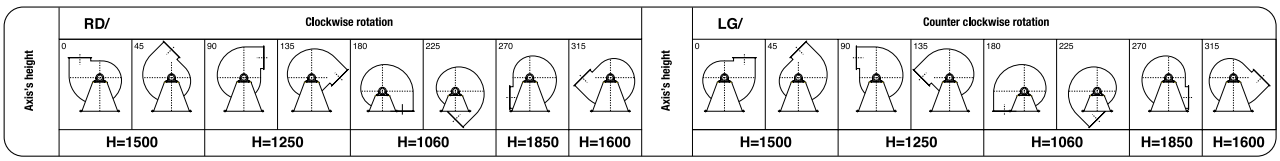

www.gotrading.co.th
Great Orient Trading

SERIES MOb 1801 SPECIFICATIONS

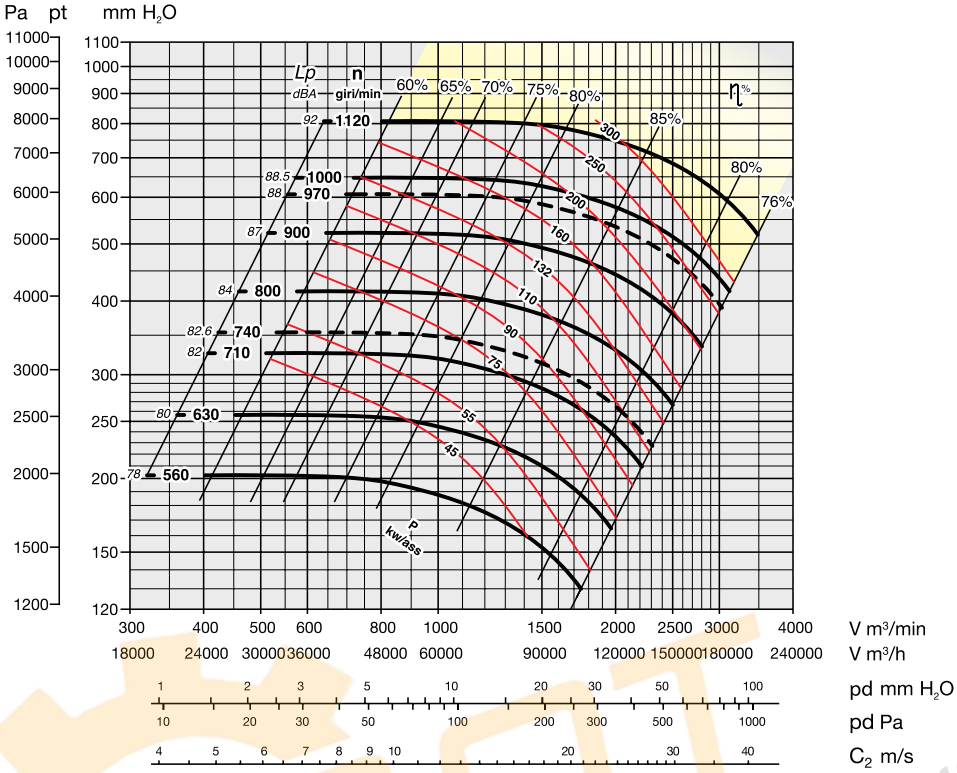

YELLOW ZONE - Consult technical office

Maximum admissible rounds:

<90°C = 1120 rounds/min.
90–200°C = 1000 rounds/min.
200–350°C = 900 rounds/min.

Noise level tolerance + 3 dBA

KW consumed fan tolerance ± 3%

OVERALL DIMENSIONS in mm

PD^2
GD^2 = 675 kgm²

Weight kg 2650

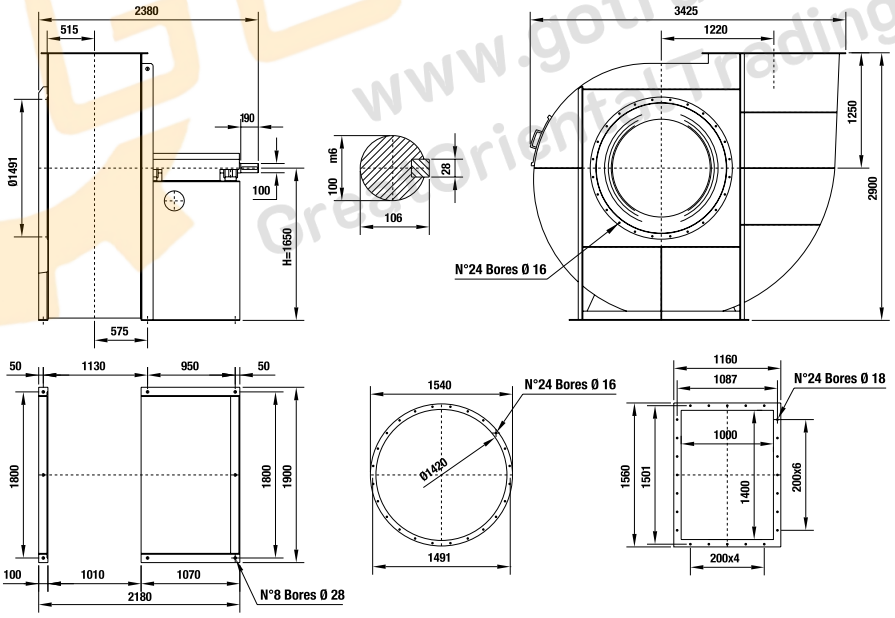

The fan is not revolvable

UNI ISO 13349 rules orientations (transmission side)

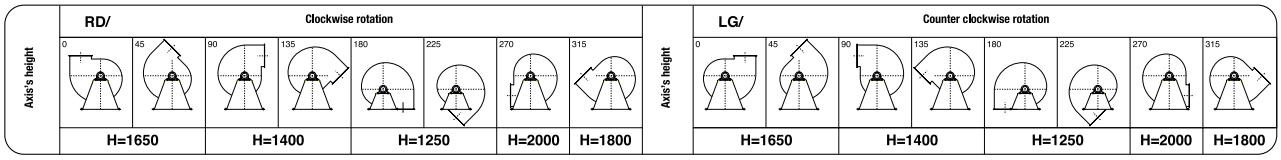

www.gotrading.co.th
Great Oriental Trading

SERIES MOb 2001 SPECIFICATIONS

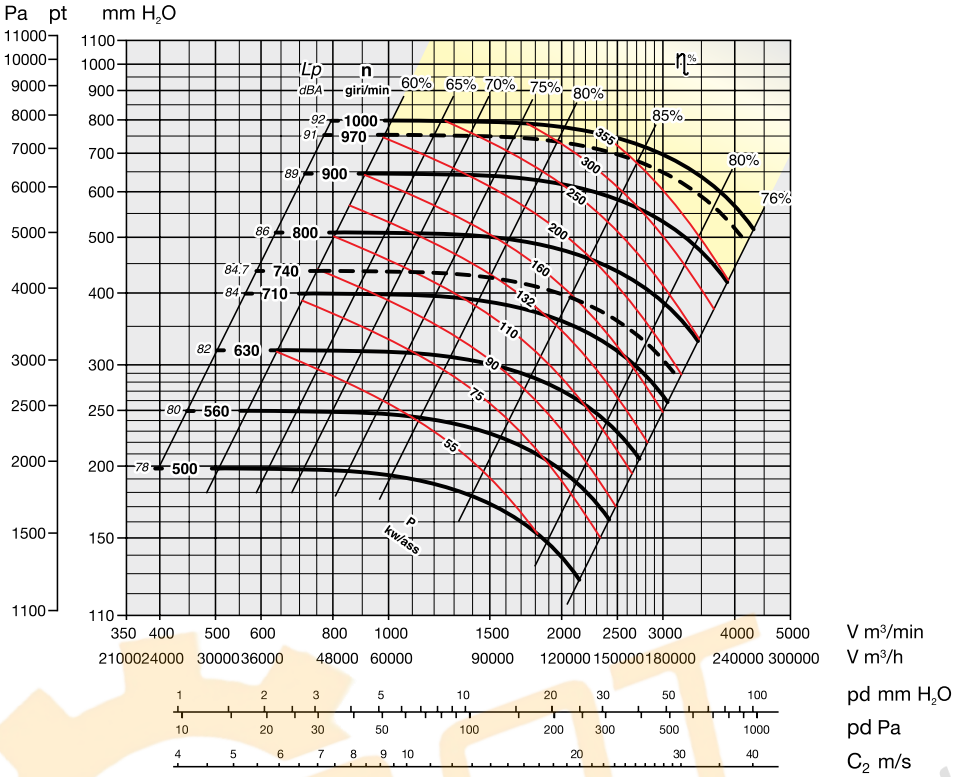

YELLOW ZONE - Consult technical office

Maximum admissible rounds:

<90°C = 1000 rounds/min.
90–200°C = 900 rounds/min.
200–350°C = 800 rounds/min.

Noise level tolerance + 3 dBA

KW consumed fan tolerance ± 3%

OVERALL DIMENSIONS in mm

PD^2
GD^2 = 1050 kgm²

Weight kg 3200

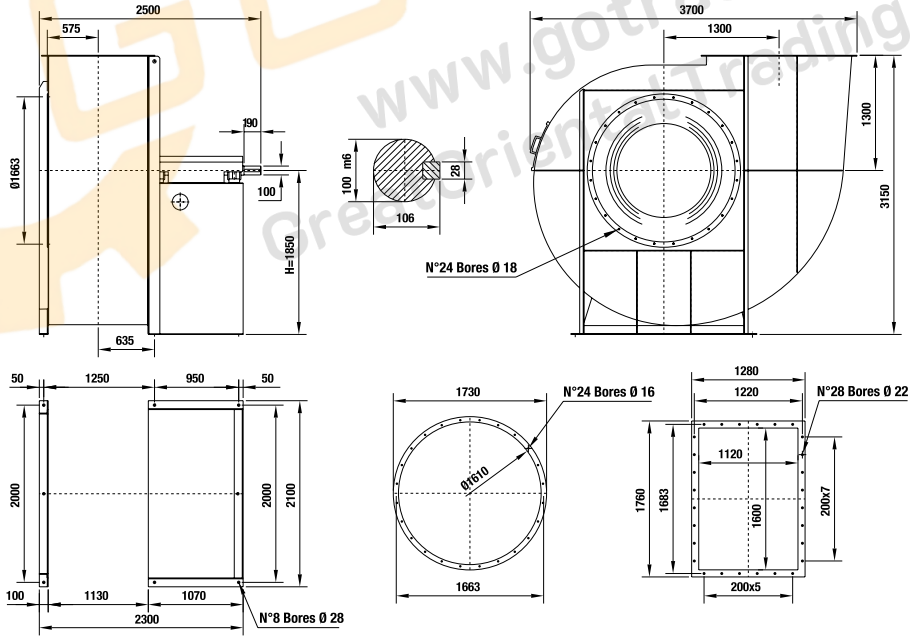

The fan is not revolvable

UNI ISO 13349 rules orientations (transmission side)

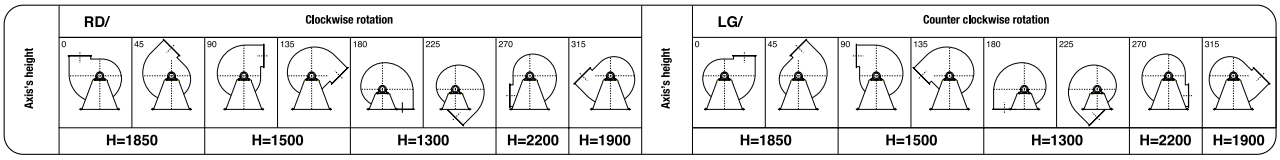

www.gotrading.co.th
Greatorient at Trading

Bedplate (Esec. 12)

MOTOR TYPE	Fino 4	5.5-15	18.5-30	37-55	75+	75+
G	**500**	**670**	**750**	**980**	**1200**	**1400**

MOb 311-561

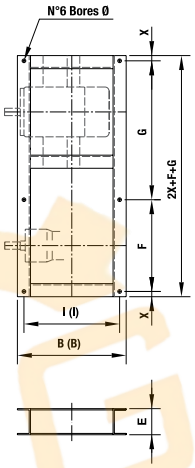

MOb 631-2001

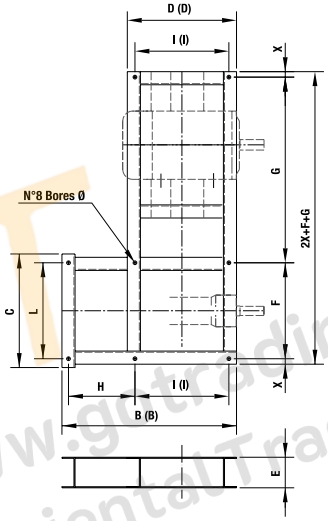

Dimensions

Series	mm													Weight
	B	(B)	C	D	(D)	E	F	X	H	I	(I)	L	Ø	kg
MOb 401	415	455	-	-	-	100	350	20	-	405	405	-	14	20
MOb 451	415	455	-	-	-	100	350	20	-	405	405	-	14	20
MOb 501	480	520	-	-	-	100	360	25	-	470	470	-	17	24
MOb 561	480	520	-	-	-	100	360	25	-	470	470	-	17	24
MOb 631	935	975	820	490	530	120	360	25	457	470	470	710	17	40
MOb 711	975	1015	910	490	530	120	800	25	490	430	470	800	17	45
MOb 801	1100	1170	990	555	615	140	870	30	550	495	555	870	17	75
MOb 901	1156	1216	1090	555	615	160	970	30	601	495	555	970	19	90
MOb 1001	1338	1338	1210	670	670	180	1060	35	668	600	600	1060	21	115
MOb 1121	1503	1503	1350	750	750	180	1200	35	753	670	670	1200	24	132
MOb 1251	1678	1678	1520	830	830	180	1320	40	853	750	750	1320	24	155
MOb 1401	1818	1818	1660	880	880	180	1500	40	938	800	800	1500	24	200
MOb 1601	2083	2083	1880	980	980	200	1700	50	1103	900	900	1700	24	245
MOb 1801	2180	2180	1900	1050	1050	220	2x900	50	1130	950	950	2x900	10x28	320
MOb 2001	2300	2300	2100	1050	1050	250	2x1000	50	1250	950	950	2x1000	10x28	405

(B) - (D) - (I) Fan with cooling fan

www.got-trading.co.th
GreatOrientalTrading

Accessories

Circular flow regulators

OVERALL DIMENSIONS in mm

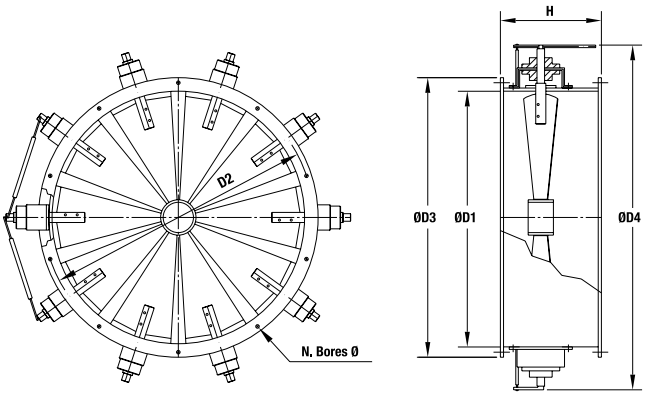

Type	D_1	D_2	D_3	D_4	H	n°	Bores Ø	Weight kg
280	280	332	366	450	280	8	11,5	24
315	321	366	400	570	280			30
355	361	405	440	610	280			33
400*	406	448	485	650	315	12		36
450	456	497	535	700	315			40
500	506	551	585	820	355			53
560	568	629	666	880	355	16		60
630	638	698	736	990	355			68
710	718	775	816	1070	355			75
800	808	861	906	1160	400		14	85
900	908	958	1006	1260	400			100
1000	1008	1067	1107	1360	400	24		130
1120	1130	1200	1248	1480	450			160
1250	1260	1337	1380	1610	450			180
1400	1420	1491	1540	1760	450		16	210
1600	1610	1663	1730	1960	500			230
1800	1810	1880		2200	500	32	20	280
2000	2010	2073	2130	2380	500			340

Rectangular flow regulators, outflow end

OVERALL DIMENSIONS in mm

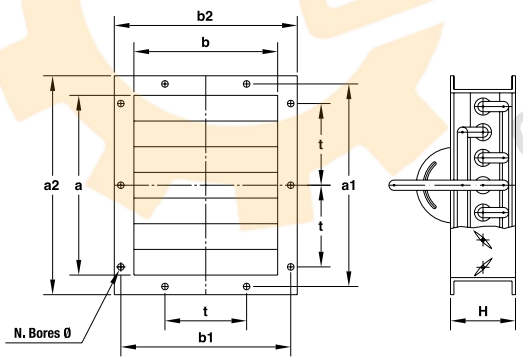

Type	a	b	a_1	b_1	a_2	b_2	H	t	n°	Bores Ø	Weight kg
90 x 63	90	63	112	90	150	123	130	-	4	9	2,2
100 x 71	100	71	125	100	160	131	130	-			2,5
112 x 80	112	80	140	112	172	140	130				2,7
125 x 90	125	90	165	130	185	150	130	112	6	11,5	3
140 x 100	140	100	182	141	210	170	130				3,3
160 x 112	160	112	200	153	230	182	130				3,8
180 x 125	180	125	219	167	250	195	130				4,5
200 x 140	200	140	241	182	270	210	130		8		5,3
224 x 160	224	160	265	200	294	230	130				6,5
250 x 180	250	180	292	219	320	250	130		10		7,5
280 x 200	280	200	332	249	360	280	130	125			8,5
315 x 224	315	224	366	273	395	304	130				9,6
355 x 250	355	250	405	300	435	330	130				11
400 x 280	400	280	448	332	484	368	130				13
450 x 315	450	315	497	366	533	402	130				18
500 x 355	500	355	551	405	587	441	150		14		21
560 x 400	560	400	629	464	669	504	150	160		14	26
630 x 450	630	450	698	513	738	553	180				30
710 x 500	710	500	775	567	815	607	180		16		34
800 x 560	800	560	871	639	921	689	200	200	14		42
900 x 630	900	630	968	708	1018	758	200		18		48
1000 x 710	1000	710	1077	785	1127	835	200				65
1120 x 800	1120	800	1210	881	1270	941	220		20	18	80
1250 x 900	1250	900	1347	978	1407	1038	220		24		95
1400 x 1000	1400	1000	1501	1087	1560	1160	250				110
1600 x 1120	1600	1120	1683	1220	1760	1280	250		28	22	150
1800 x 1250	1800	1250	1876	1357	1960	1410	280		32		200
2000 x 1400	2000	1400	2093	1511	2180	1580	280		34		280

External **flow regulator** designed for dusty air, sturdy construction, for industrial use.
Layout 1 = max. temperature 120°C.
Layout 2 = from 120 to 350°C. + pression ≥ 700 mm H_2O.

www.ccgtrading.co.th
Green Oriental Trading

Accessories

Louver flow regulators

OVERALL DIMENSIONS in mm

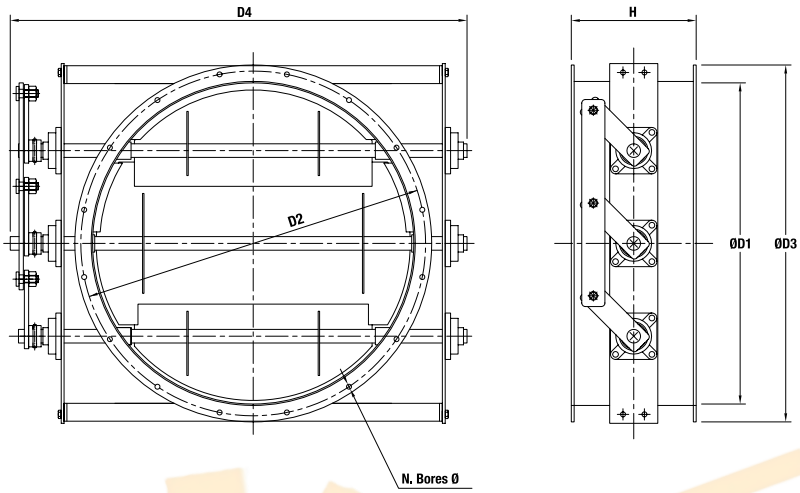

Type	D_1	D_2	D_3	D_4	H	Weight kg
315	315	366	400	640	280	21
355	355	405	440	680	280	23
400*	400	448	485	720	315	29
450	450	497	535	770	315	32
500	500	551	585	820	355	60
560	560	629	666	900	355	75
630	630	698	736	1040	355	80
710	710	775	816	1130	355	86
800	800	861	906	1220	400	93
900	900	958	1006	1320	400	110
1000	1000	1067	1107	1420	400	126
1120	1120	1200	1248	1560	450	160
1250	1250	1337	1380	1690	450	192
1400	1400	1491	1540	1860	450	260
1600	1600	1663	1730	2050	500	320

Butterfly flow regulators

OVERALL DIMENSIONS in mm

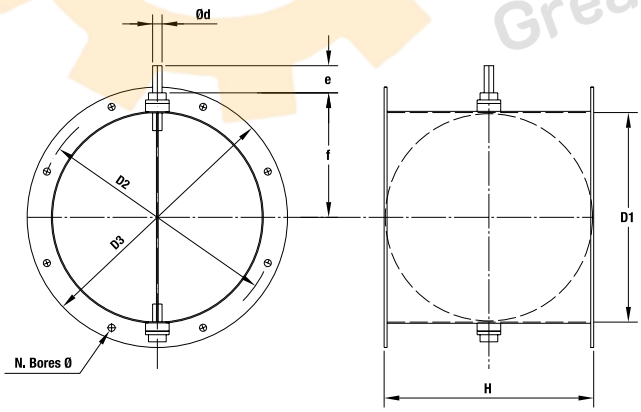

Type	D_1	D_2	D_3	d	e	f	H	n°...Bores Ø	Weight kg
140	140	182	215	14	30	110	140	8 - 11,5	2,8
160	160	200	235	14	30	120	160	8 - 11,5	3,2
180	180	219	255	14	30	130	180	8 - 11,5	4
200	200	241	275	16	30	140	200	8 - 11,5	4,8
224	224	265	299	16	30	150	224	8 - 11,5	5,5
250	250	292	325	16	45	165	250	8 - 11,5	6,5
280	280	332	366	16	45	180	280	8 - 11,5	8,5
315	315	366	401	16	45	195	315	8 - 11,5	10,5
355	355	405	441	16	45	215	355	8 - 11,5	13,5
400 *	400	448	486	16	45	240	400	12 - 11,5	18
450	450	497	535	20	60	280	450	12 - 11,5	23
500	500	551	585	20	60	305	500	12 - 11,5	29
560	560	629	666	20	60	335	560	16 - 11,5	36
630	630	698	736	20	60	370	630	16 - 13	47
710	710	775	816	20	60	410	710	16 - 13	61
800	800	861	906	30	70	455	800	16 - 13	80
900	900	958	1006	30	70	505	900	16 - 13	100
1000	1000	1067	1107	30	70	555	1000	24 - 14	155
1120	1120	1200	1248	30	70	615	1120	24 - 14	190

GOT
www.gotrading.co.th
GreatOrientalTrading

Accesssories

Vibration-damping couplings outflow-end

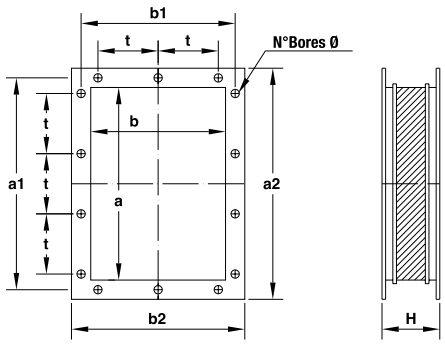

Series	mm								Bores		Weight
	a	b	a_1	b_1	a_2	b_2	t	H	n°	Ø	kg
90 x 63	90	63	112	90	150	123	-	140	4	11	1
100 x 71	100	71	125	100	160	131	-	140	4	11	1,1
112 x 80	112	80	140	112	172	140	-	140	4	11	1,3
125 x 90	125	90	165	130	185	150	100	140	6	11	1,6
140 x 100	140	100	182	141	210	170	112	140	6	12	2,1
160 x 112	160	112	200	153	230	182	112	140	6	12	2,6
180 x 125	180	125	219	167	250	195	112	140	6	12	3,2
200 x 140	200	140	241	182	270	210	112	140	8	12	3,9
224 x 160	224	160	265	200	294	230	112	140	8	12	4,6
250 x 180	250	180	292	219	320	250	112	140	10	12	5,5
280 x 200	280	200	332	249	360	280	125	140	10	12	7
315 x 224	315	224	366	273	395	304	125	140	10	12	8,2
355 x 250	355	250	405	300	435	330	125	140	10	12	10
400 x 280	400	280	448	332	480	360	125	140	14	12	11,2
450 x 315	450	315	497	366	530	395	125	140	14	12	13
500 x 355	500	355	551	405	580	435	125	160	14	11,5	14,5
560 x 400	560	400	629	464	660	500	160	160	14	14	18
630 x 450	630	450	698	513	730	550	160	160	14	14	19,5
710 x 500	710	500	775	567	810	600	160	160	16	14	22
800 x 560	800	560	871	639	930	690	200	160	14	14	31
900 x 630	900	630	968	708	1030	760	200	160	18	14	37
1000 x 710	1000	710	1077	785	1130	830	200	200	18	14	45
1120 x 800	1120	800	1210	881	1270	940	200	200	20	18	56
1250 x 900	1250	900	1347	978	1400	1040	200	200	24	18	65
1400 x 1000	1400	1000	1501	1087	1550	1160	200	200	24	18	80
1600 x 1120	1600	1120	1683	1220	1760	1280	200	200	28	22	100
1800 x 1250	1800	1250	1876	1357	1960	1410	200	200	32	22	130
2000 x 1400	2000	1400	2093	1511	2180	1580	200	200	34	22	165

Vibration-damping couplings intake-end

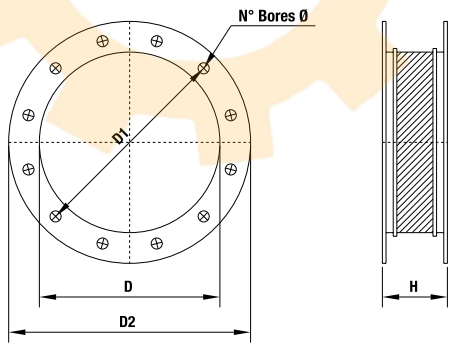

Series	mm				Bores		Weight
	D	D_1	D_2	H	n°	Ø	kg
140	140	182	215	140	8	11,5	3
160	160	200	235	140	8	11,5	3,2
180	180	219	255	140	8	11,5	3,5
200	200	241	275	140	8	11,5	3,8
224	224	265	299	140	8	11,5	4,2
250	250	292	325	140	8	11,5	5
280	280	332	366	140	8	11,5	6,8
315	315	366	401	140	8	11,5	7,5
355	355	405	440	140	8	11,5	9
400 *	400	448	485	140	12	11,5	10
450	450	497	535	140	12	11,5	11,5
500	500	551	585	160	12	11,5	13
560	560	629	666	160	16	11,5	16
630	630	698	736	160	16	13	17,5
710	710	775	816	160	16	13	20
800	800	861	906	160	16	13	22
900	900	958	1006	160	16	13	25
1000	1000	1067	1107	200	24	14	28
1120	1120	1200	1248	200	24	14	42
1250	1250	1337	1380	200	24	14	46
1400	1400	1491	1540	200	24	16	52
1600	1600	1663	1730	200	24	16	62
1800	1810	1880	1950	200	32	18	85
2000	2010	2073	2130	200	32	18	110

www.gotrading.co.th
GreatOrientalTrading

Accessories

Protection Net

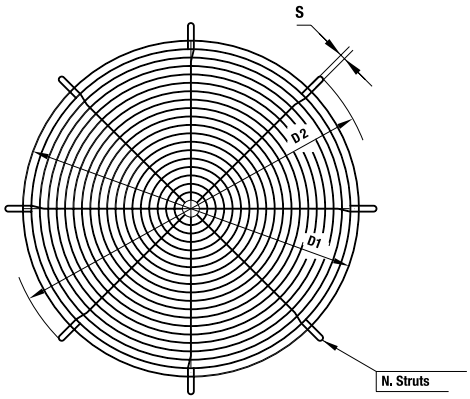

Dn	(mm)	(mm)	(mm)	n°
125	140	220	12	4
140				
160				
180	212	285	12	4
200				
224				
250	312	385	12	4
280				
315				
355	357	430	12	4
400	408	470	12	4
450	450	528	12	4
500	500	580	16	4
560	562	650	16	4
630	620	720	16	8
710	710	800	16	8
800	795	895	16	8
900	890	990	16	8
1000	990	1130	18	8
1120	1115	1250	18	8
1250	1245	1400	20	8
1400	1405	1560	20	8
1600	1595	1750	20	8
1800	1795	1950	20	8
2000	1995	2150	20	8

ISOLATOR

TYPE A

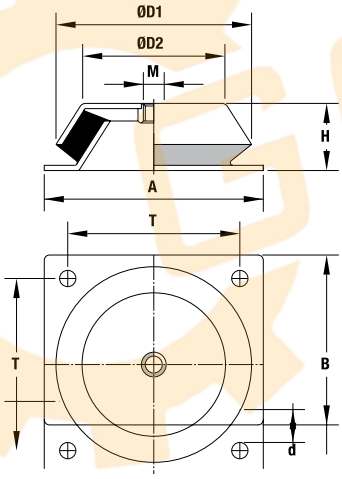

Type	A	B	H	M	T	d	D1	D2
MOD 58540	108	108	40	12	88	9	101	75
MOD 33629	168	168	50	16	132	13	136	125
MOD 58541	200	200	70	20	165	13	192	170

TYPE B

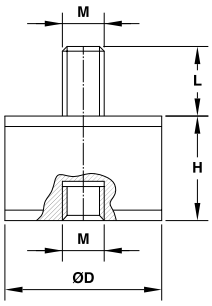

Type	D	H	M	L
B_D3020	30	20	8	20
B_D3030	30	30	8	20
B_D4030	40	30	8	23
B_D4040	40	40	8	23
B_D5020	50	20	10	28
B_D5030	50	30	10	28
B_D5045	50	45	10	28
B_D7045	70	45	10	30
B_D7540	75	40	12	37
B_D7555	75	55	12	37
B_D10040	100	40	16	45
B_D10055	100	55	16	45
B_D10075	100	75	16	45

(Quote = mm)

www.gotrading.co.th
GreatOrientalTrading

SECTION

Esec. 1

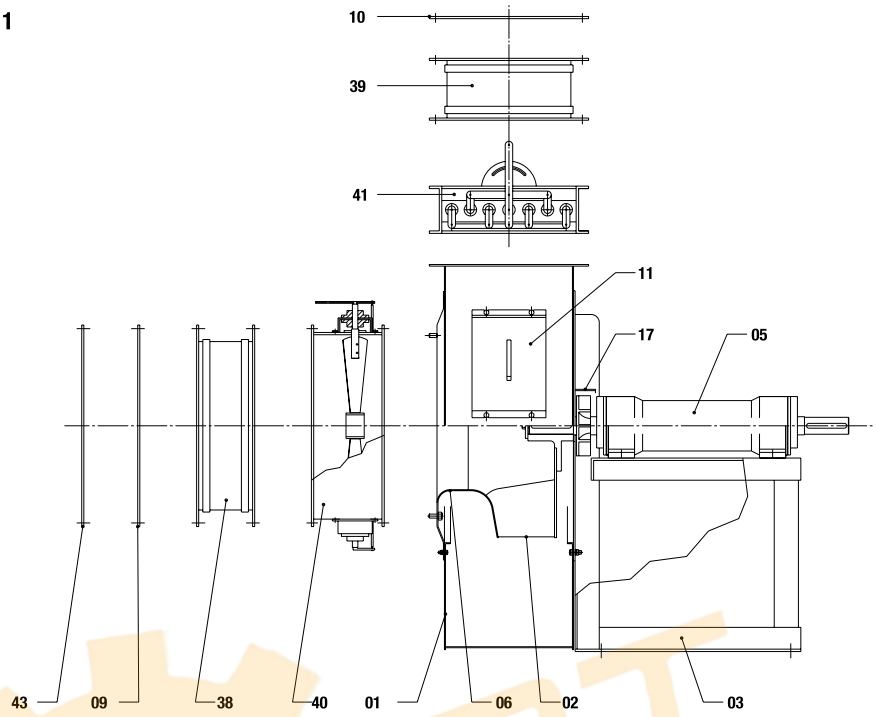

Esec. 12

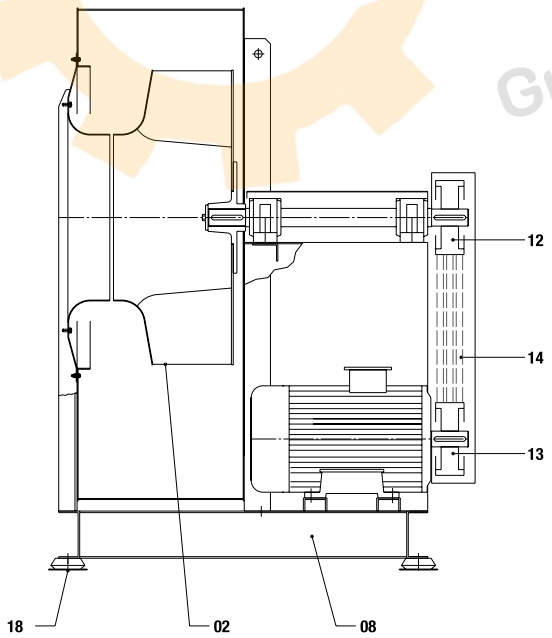

Esec. 9

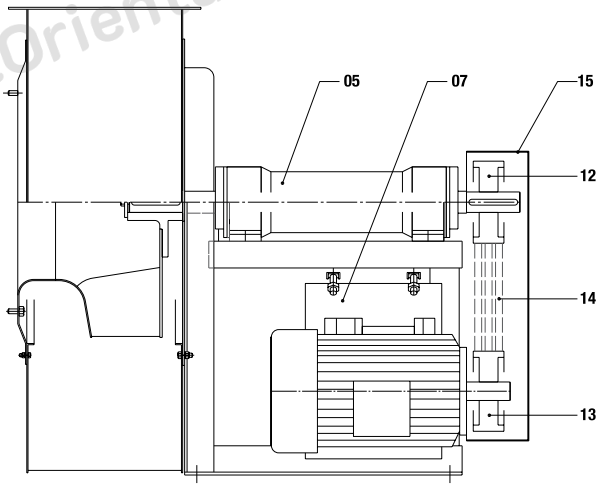

GOT
www.gotrading.co.th
GreatOrientalTrading

SECTION

Monoblock housing

Frame size **35 A/B 28 – 60 A/B 55** **50 A/B R 48 – 60 A/B R 55**
50 AL R 48 – 60 AL R 55

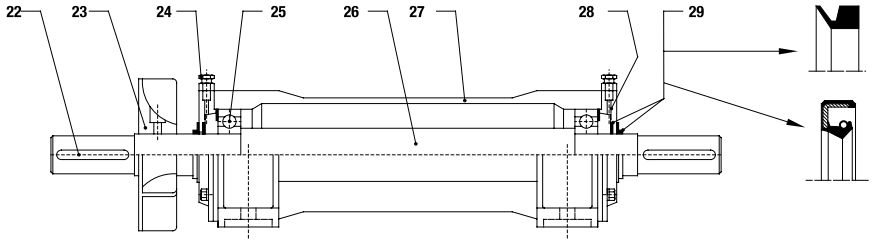

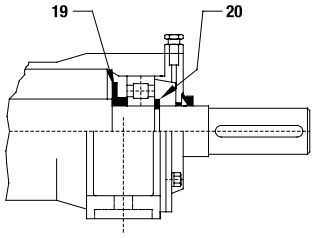

Frame size **SNL 515 – SNL 524** **35 AL 28 – 60 AL 55**

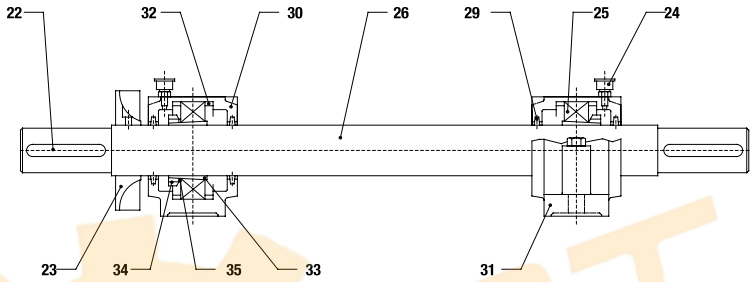

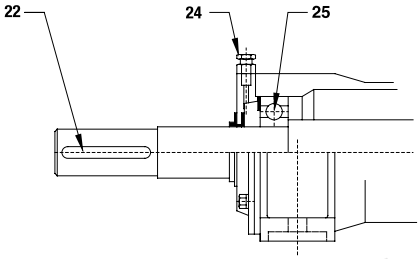

SPARE PARTS

01 - CASE
02 - IMPELLER
03 - BASE
04 - MOTOR
05 - SUPPORT
06 - NOZZLE
07 - TURNING BASE
08 - BEDPLATE
09 - SUCKING COUNTERFLANGE
10 - PRESSING COUNTERFLANGE
11 - INSPECTION DOOR
12 - FAN PULLEY
13 - MOTOR PULLEY
14 - FAN BELTS
15 - BELT PROTECTION CASE
17 - COOLING FAN PROTECTION
18 - SHOCK ISOLATING MOUNTINGS
19 - GREASE PROTECTION RING
20 - SEEGER RING
22 - KEY
23 - COOLING FAN
24 - LUBRIFICATOR
25 - BEARING
26 - SHAFT
27 - SUPPORT HOUSING
28 - CAP
29 - PROTECTION RING
30 - COVER
31 - HOUSING
32 - FIXING COLLARS
33 - LOCKING COMPASS
34 - RING NUT
35 - SECURITY WASHER
37 - DISCHARGE CAP
38 - SUCKING FLEXIBLE JOINT
39 - PRESSING FLEXIBLE JOINT
40 - CIRCULAR FLOW REGULATOR
41 - RECTANGULAR FLOW REGULATOR
43 - PROTECTION NET

www.gotrading.co.th
GreatOrientalTrading

EuroVent

www.gotrading.co.th
GreatOrientalTrading

บริษัท เกรทโอเรียนเต็ล เทรดดิ้ง จำกัด
เลขที่ 1049 ถนนร่วมธรรม
ตำบลคอหงส์ อำเภอหาดใหญ่
จังหวัดสงขลา 90110
074-300212-4

GOT
www.gotrading.co.th
GreaOrintalTrading
097-361-9703
GreatOrientalTrading
@gotrading